JIC Enclosures
Type 4X Lift-Off Cover
Data Sheet

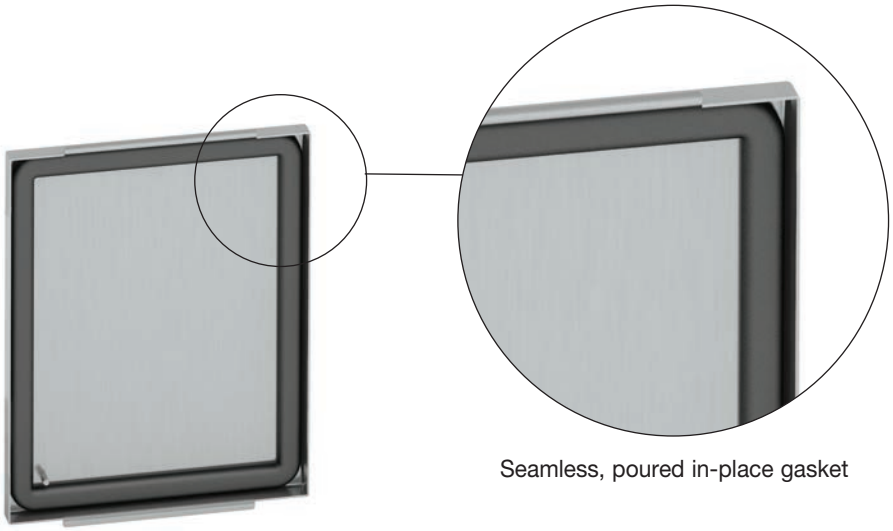

Seamless, poured in-place gasket

Application
- Houses electrical controls and instruments
- Intended for indoor or outdoor use where a corrosive environment exists
- Protects against corrosion, windblown dust and rain, splashing water and hose directed water

Standards
- UL 508 listed, Type 4X, Type 4, Type 12 and Type 13
- CSA C22.2 No.94 certified, Type 4X, Type 4, Type 12 and Type 13
- Conforms to NEMA standard for Type 4X, Type 4, Type 12 and Type 13
- Conforms to JIC standard EGP-1-1967
- Meets NEMA 3RX requirements

Finish
- Cover and sides of body have a smooth #4 brushed finish

Accessories
- Panels
- JIC terminal strap kit
- JIC terminal strip kit
- Terminal blocks
- See Accessories section

Construction
- Enclosure and cover are fabricated from (16) gauge, Type 304 or Type 316L stainless steel
- All continuous welded seams are finished smooth
- Cover is secured to the body with easy-to-operate stainless steel screw clamps mounted on all four sides
- Cover has a seamless poured in-place gasket
- #10-32 weldnuts are provided for mounting optional panel on 6” x 4” and larger enclosures
- External mounting feet are provided for secure wall mounting

Discount Schedule: C2
Subclass: D10 & DD0

Notes: Cooper B-Line can provide special sizes, finishes and other modifications. Consult the factory for your special requirements.

JIC Enclosures
Type 4X Lift-Off Cover
Illustration Sheet and Catalog Number

Enclosure Catalog Number Stainless Steel Type 304	Enclosure Catalog Number Stainless Steel Type 316L	Enclosure Size Height x Width x Depth A x B x C in.	Enclosure Size Height x Width x Depth A x B x C mm	D in.	D mm	E in.	E mm	F in.	F mm	Panel Catalog Number Steel	Panel Catalog Number Conductive	Panel Size Height x Width in.	Panel Size Height x Width mm
443-4XSLC	443-4XSS6LC	4.00 x 4.00 x 3.00	102 x 102 x 76	2.00	51	2.00	51	-	-	-	-	-	-
643-4XSLC	643-4XSS6LC	6.00 x 4.00 x 3.00	152 x 102 x 76	3.00	76	2.00	51	-	-	AW64P	AW64GP	4.87 x 2.87	124 x 73
664-4XSLC	664-4XSS6LC	6.00 x 6.00 x 4.00	152 x 152 x 102	3.00	76	3.00	76	-	-	AW66P	AW66GP	4.87 x 4.87	124 x 124
864-4XSLC	864-4XSS6LC	8.00 x 6.00 x 4.00	203 x 152 x 102	-	-	-	-	2.00	51	AW86P	AW86GP	6.87 x 4.87	174 x 124
884-4XSLC	884-4XSS6LC	8.00 x 8.00 x 4.00	203 x 203 x 102	-	-	-	-	2.00	51	AW88P	AW88GP	6.87 x 6.87	174 x 174
1084-4XSLC	1084-4XSS6LC	10.00 x 8.00 x 4.00	254 x 203 x 102	-	-	-	-	2.00	51	AW108P	AW108GP	8.87 x 6.87	225 x 174
12105-4XSLC	12105-4XSS6LC	12.00 x 10.00 x 5.00	305 x 254 x 127	-	-	-	-	3.00	76	AW1210P	AW1210GP	10.87 x 8.87	276 x 225
14126-4XSLC	14126-4XSS6LC	14.00 x 12.00 x 6.00	356 x 305 x 152	-	-	-	-	3.00	76	AW1412P	AW1412GP	12.87 x 10.87	327 x 276
16146-4XSLC	16146-4XSS6LC	16.00 x 14.00 x 6.00	406 x 356 x 152	-	-	-	-	3.00	38	AW1614P	AW1614GP	14.87 x 12.87	378 x 327

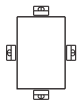

443-4XSLC
643-4XSLC
664-4XSLC

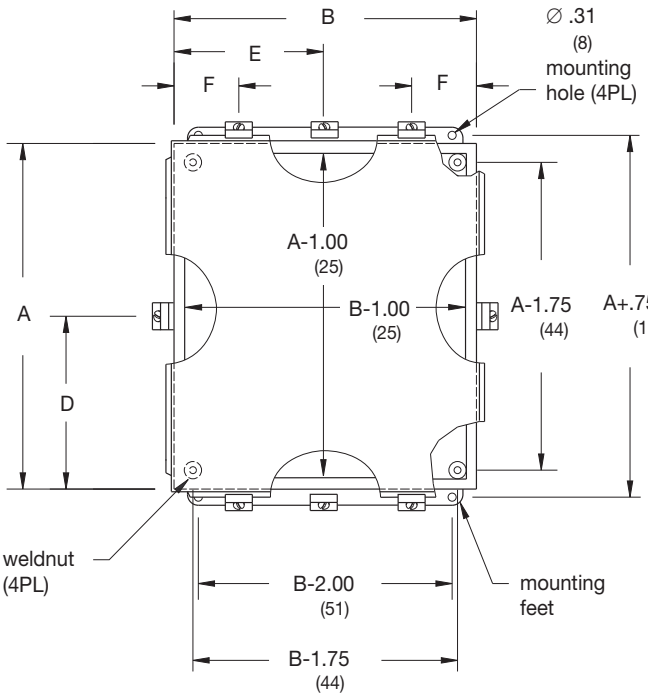

Front View

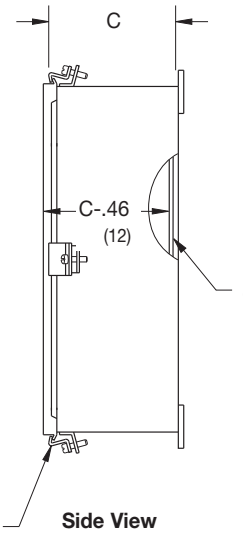

Side View

864-4XSLC
884-4XSLC
1084-4XSLC
12105-4XSLC
14126-4XSLC
16146-4XSLC

Cover Clamp Layout

Notes: Dimensions are in inches. Millimeters shown are for reference only. Data subject to change without notice.