Catalog Number:	U1254-X-KK
Item Description:	200A 4T RL 4P CTR WY
UPC Code:	784572133709

Brand Name:	Milbank
Type:	Ringless Meter Socket
Application:	Meter Socket
Standard:	UL Listed
Voltage Rating:	300 Volts Alternating Current
Amperage Rating:	200 Ampere Continuous
Phase:	1 Phase
Frequency Rating:	60 Hertz
Cable Entry:	Overhead and Underground, Center Wireway
Terminal:	3/8 Inch Line Side and Lay in Load Side
Mounting:	Surface Mount
Enclosure:	Type 3R, G90 Galvanized Steel with Powder Coat Finish

Additional Specifications:

Load Side Wire Range:6 AWG - 350 kcmil

AIC or SCCR Rating: Please Contact Factory

Optional Line Side Lug Kits:K1539, K1350, K1540, K1541

Optional 5th Terminal Position:3 O'Clock, 9 O'Clock

Maximum Amperage:360 Maximum Ampere

Number of Jaws:4 Terminal

Hub Opening and Closing Plates:Large Closing Plate

Bypass Provision:Horn Bypass

Number Positions:4 Positions

Utility requirements may vary. Always consult the serving utility for their requirements prior to ordering or installing this equipment. This product must always be installed by a licensed electrician. Installation of this equipment may require local electrical inspector approval.

FEATURE TABLE		
ITEM	QTY	DESCRIPTION
A	4	STD. MNTG. EMBOSS
B	1	¼ SOLID K.O.
C	4	½ SOLID K.O.
D	1	½, ¾, 1 CONC. K.O.
E	10	1, 1¼, 1½, 2, 2½ CONC. K.O.
F	2	2, 2½, 3 CONC. K.O.

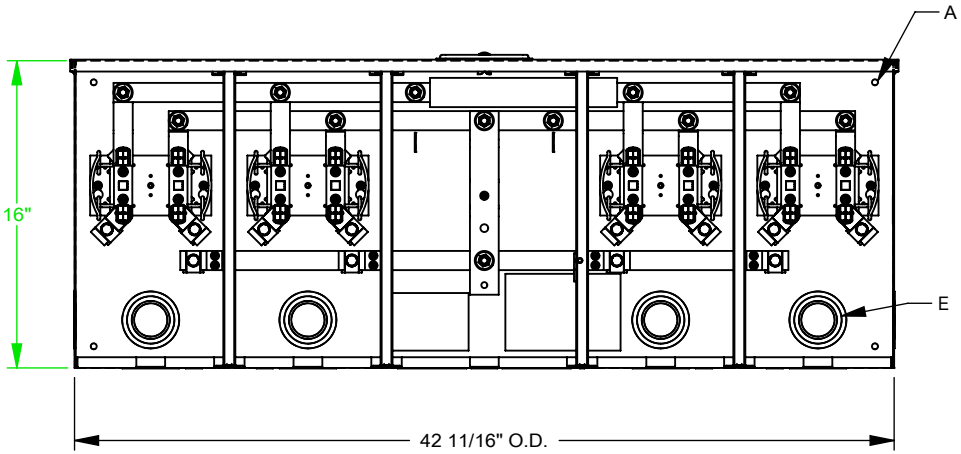

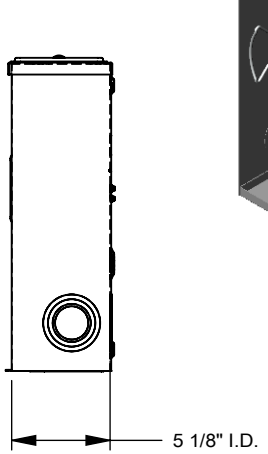

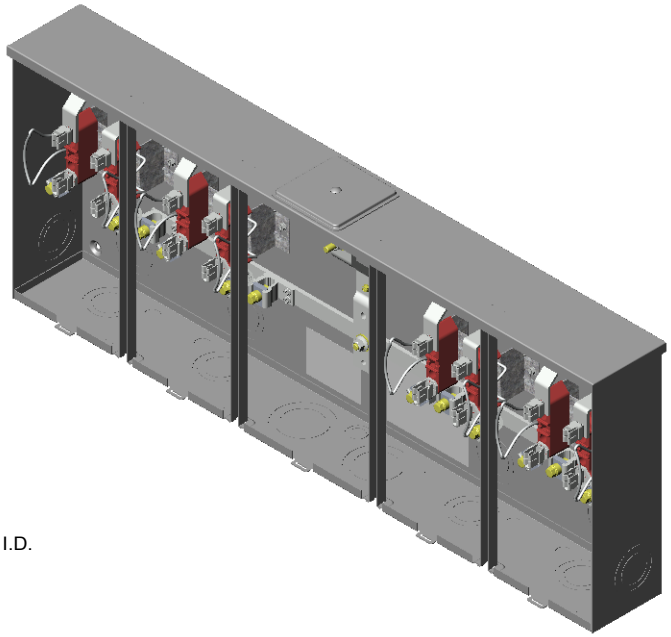

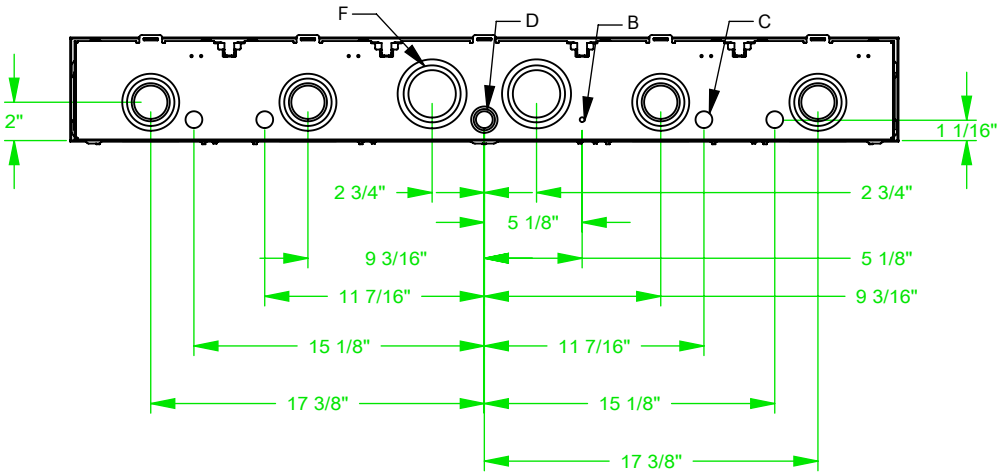

MILBANK
ENERGY AT WORK

Version:

1

All dimensions are +/- 1/16".
Drawing views are not to scale.

Utility requirements for this equipment may vary. Always consult the serving utility for their requirements prior to ordering or installing this equipment. This product must be installed by a licensed electrician. Installation of this equipment may require local electrical inspector approval.