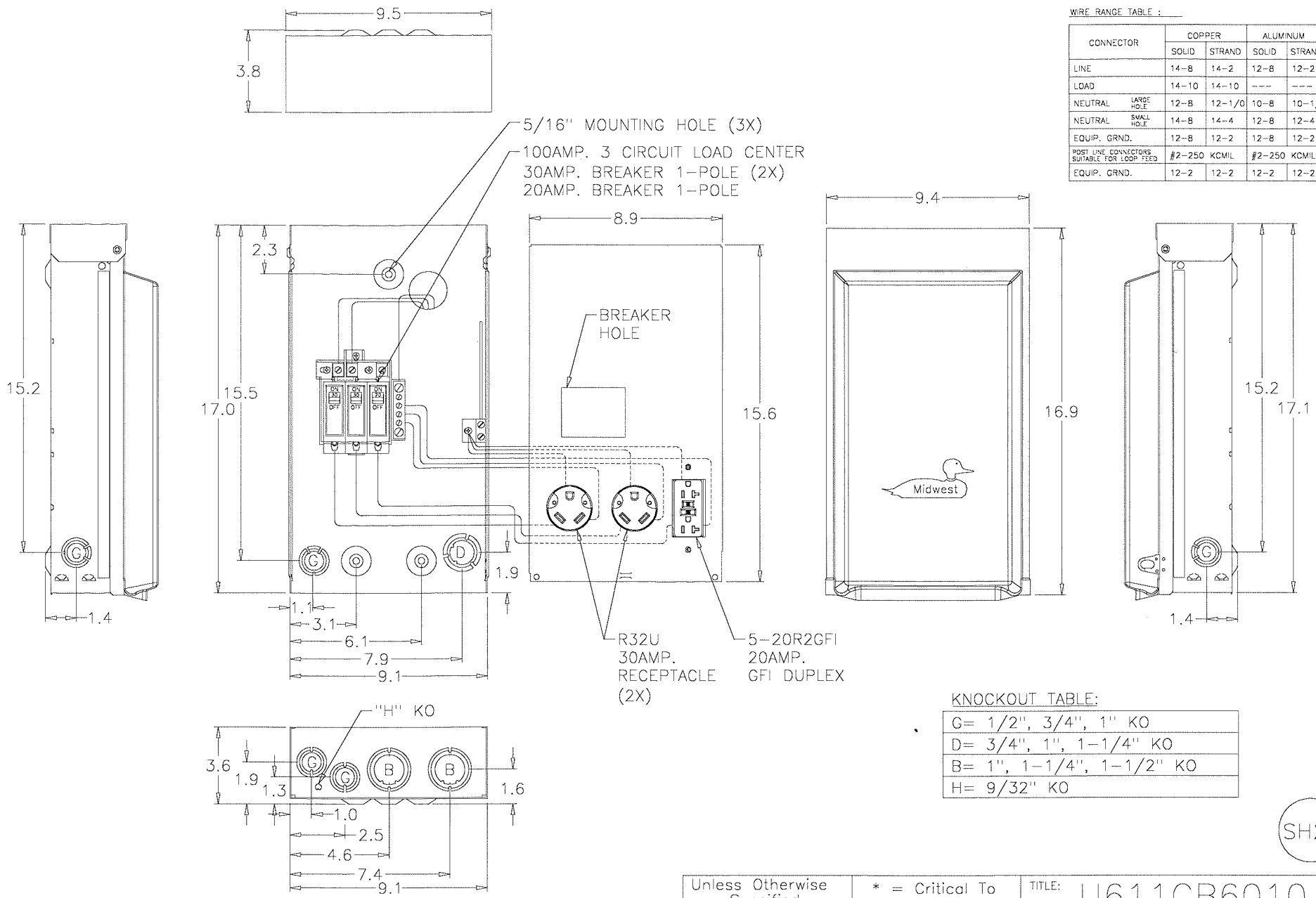

WIRE RANGE TABLE :

CONNECTOR		COPPER		ALUMINUM	
		SOLID	STRAND	SOLID	STRAND
LINE		14-8	14-2	12-8	12-2
LOAD		14-10	14-10	---	---
NEUTRAL	LARGE HOLE	12-8	12-1/0	10-8	10-1/0
NEUTRAL	SMALL HOLE	14-8	14-4	12-8	12-4
EQUIP. GRND.		12-8	12-2	12-8	12-2
POST LINE CONNECTORS SUITABLE FOR LOOP FEED		#2-250 KCMIL		#2-250 KCMIL	
EQUIP. GRND.		12-2	12-2	12-2	12-2

KNOCKOUT TABLE:

G= 1/2", 3/4", 1" KO
D= 3/4", 1", 1-1/4" KO
B= 1", 1-1/4", 1-1/2" KO
H= 9/32" KO

SH20

Rev. 1 R0746956 JDE 2-7-08

Y

AutoCad Generated

Dr. By: JDE X Date: 2-7-08

Ck. By: Date:

MIDWEST ELECTRIC PRODUCTS, INC.
Mankato, MN

Midwest

Unless Otherwise Specified
Tolerances On:
3 Pl. Decimals ± .010
2 Pl. Decimals ± .030
Fractions ± 1/32
Angles ± 1/2°
Holes ± .003
Dimensions Are In Inches

* = Critical To Quality

SCALE 1 : 1

SIZE B

SHEET 1 OF 2

TITLE: U611CB6010
HEAD OUTLINE

DWG NO: 198B8604

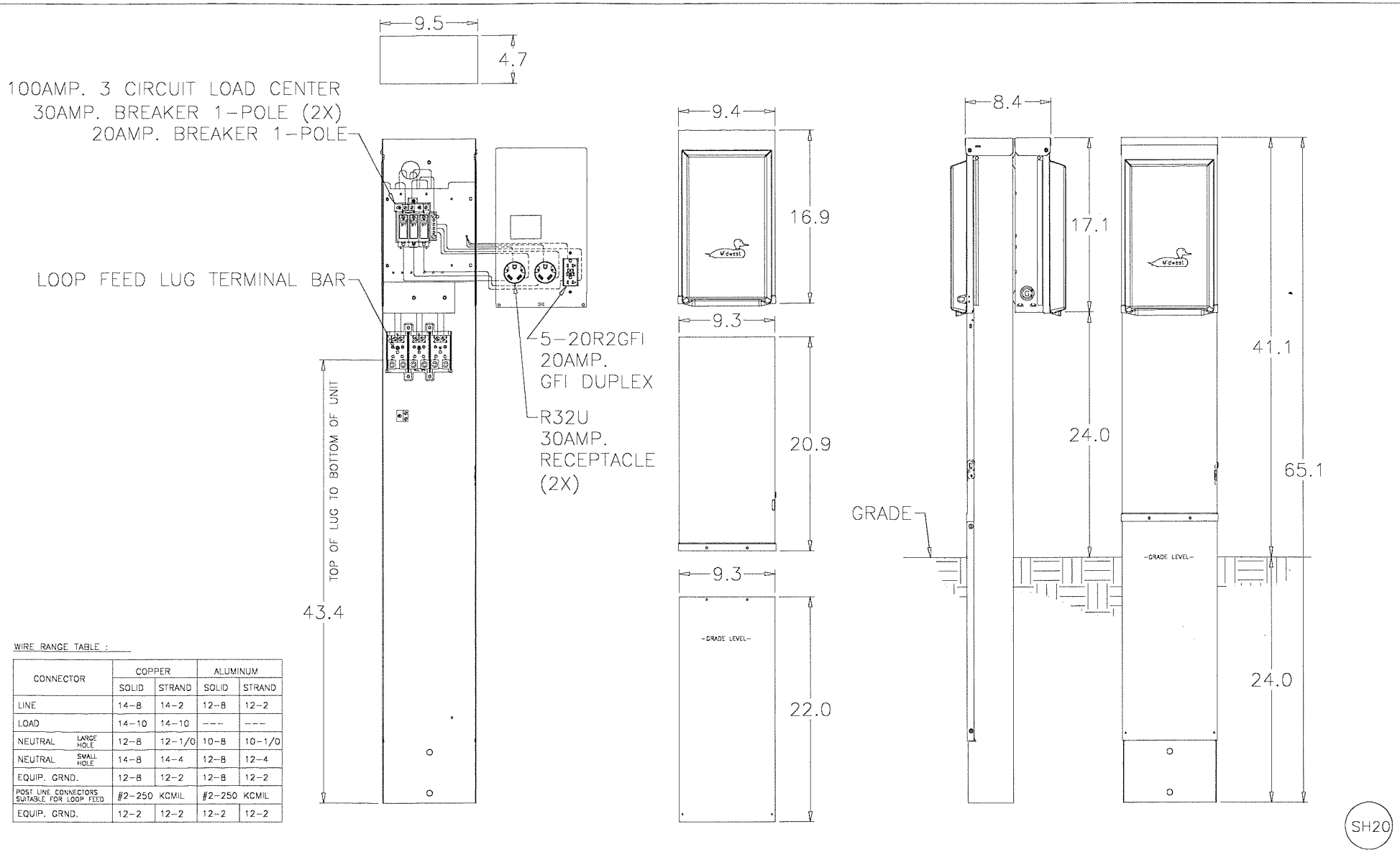

WIRE RANGE TABLE :

CONNECTOR		COPPER		ALUMINUM	
		SOLID	STRAND	SOLID	STRAND
LINE		14-8	14-2	12-8	12-2
LOAD		14-10	14-10	---	---
NEUTRAL	LARGE HOLE	12-8	12-1/0	10-8	10-1/0
NEUTRAL	SMALL HOLE	14-8	14-4	12-8	12-4
EQUIP. GRND.		12-8	12-2	12-8	12-2
POST LINE CONNECTORS SUITABLE FOR LOOP FEED		#2-250 KCMIL		#2-250 KCMIL	
EQUIP. GRND.		12-2	12-2	12-2	12-2

NOTES: EARTH BURIAL POST

Rev. 1 R0746956 JDE 2-7-08

AutoCad Generated

Dr. By: JDE Date: 2-7-08

Ck. By: Date:

MIDWEST ELECTRIC PRODUCTS, INC.
Mankato, MN

Midwest

Unless Otherwise Specified
Tolerances On:
3 Pl. Decimals ± .010
2 Pl. Decimals ± .030
Fractions ± 1/32
Angles ± 1/2°
Holes ± .003
Dimensions Are In Inches

* = Critical To Quality

SCALE 1 : 1

SIZE B

SHEET 2 OF 2

TITLE: U611CB6010
POST/ HEAD OUTLINE

DWG NO: 198B8604