Single Pole Devices and Temporary Power

150A, 600V AC/250V DC

Male Receptacles

HUBBELL



Ordering Information

Description	Device Color	UPC	Catalog Number
Double Set Screw type,150A Panel Mount,thermoplastic	Blue	783585458151	**HBL15MRBL**

Standards

UL and cUL Listed
UL Enclosure Types 3R, 4X, 12
National Electric Code (NEC), ANSI/NFPA 70

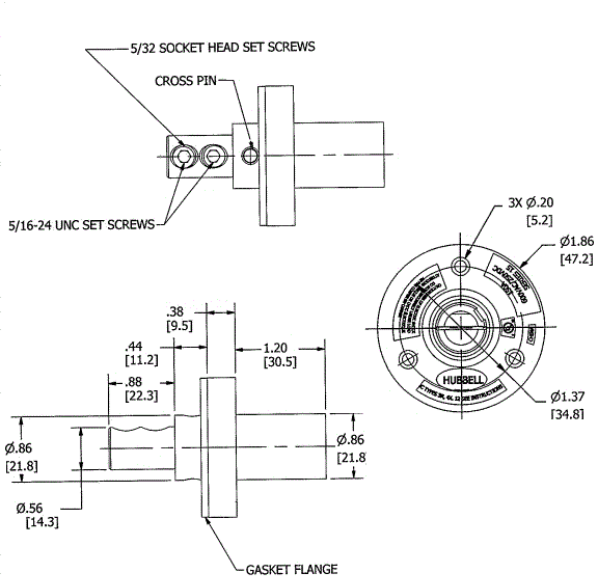

Specifications

Base Compound	Thermoplastic Elastomer (TPE)
Contact Material	Brass
Retaining Screw Material	Nylon
Mounting Hole	3x Ø .20"
Termination	(2) 5/32 Socket Head Set Screws

Performance

Electrical

Amperage Rating	150A Maximum
Voltage Ratings	600V AC Maximum; 250V DC Maximum

Mechanical

Product Identification	Ratings are a permanent part of device
Terminal Accommodation	#8 to #2 AWG

Online Resources

Customer Use Drawing
eCatalog
Installation Instructions

Dimensions in Inches (mm)

HUBBELL®
Wiring Device-Kellems