This document was generated on 11/06/2013

PLEASE CHECK WWW.MOLEX.COM FOR LATEST PART INFORMATION

Part Number: 130013-0148
Status: Active
Overview: Brad® Mini-Change® Connectors
Description: Mini-Change® A-Size Receptacle with Leads, 1/2" - 14NPT Threads, Straight Female, 3 Poles, Length 0.305m

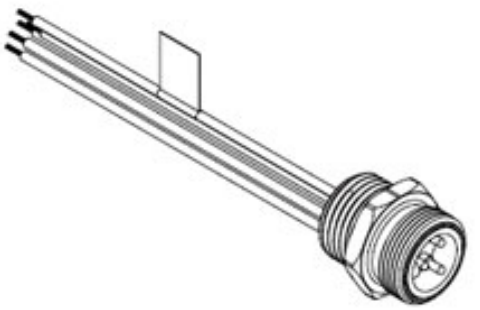

Series image - Reference only

Documents:
Drawing (PDF)
RoHS Certificate of Compliance (PDF)

Agency Certification

CSA	LR6837
UL	E152210

General

Product Family	Industrial Receptacles
Series	130013
IP Rating	IP67
NEMA Rating	NEMA 6
Overview	Brad® Mini-Change® Connectors
Product Name	Mini-Change®
Type	Single Ended (pigtail)
UPC	78678805208

Physical

Coupling Type	External Thread
Gender	Female
Keyway	Single
Length	1.83m
Material - Component	Zinc Die-Cast with Black Epoxy
Mounting Thread Size	1/2" - 14 NPT
Net Weight	90.310/g
Orientation	Straight
Panel Mount	N/A
Poles	3
Temperature Range - Operating	-20°C to +105°C
Wire Size AWG	16
Wire/Cable Type	UL 1015

Electrical

Current - Maximum per Contact	13A
Voltage - Maximum	600V AC/DC

Material Info

Old Part Number	1R3004A20F060

Reference - Drawing Numbers

Sales Drawing	SD-130013-060

EU RoHS
RoHS Compliant by Exemption
REACH SVHC
Not Reviewed
Low-Halogen Status
Not Reviewed

China RoHS

Need more information on product environmental compliance?

Email productcompliance@molex.com
For a multiple part number RoHS Certificate of Compliance, click here

Please visit the Contact Us section for any non-product compliance questions.

Search Parts in this Series
130013Series

This document was generated on 11/06/2013

PLEASE CHECK WWW.MOLEX.COM FOR LATEST PART INFORMATION