8200-PLI



Color: Ivory

UPC Code: 07847710904

Country Of Origin: Mexico

NEMA: 5-15R



Item Description

Duplex Receptacle Outlet, Extra Heavy-Duty Hospital Grade, Power Indication, Smooth Face, 15 Amp, 125 Volt, Back or Side Wire, NEMA 5-15R, 2-Pole, 3-Wire, Self-Grounding - Ivory

Technical Information

AC Horsepower Ratings

Horsepower Rating: 1/2 HP

Electrical Specifications

Amperage: 15 A

Current Limiting: Full Rated Current

Dielectric Voltage: Withstands 2000V per UL498

Grounding: Self-Grounding

Pole: 2

Temperature Rise: Max 30C after 250 cycles OL at 200 percent rated current

Voltage: 125 VAC

Wire: 3

Environmental Specifications

Flammability: Rated V-2 per UL 94

Operating Temperature: -40°C to 60°C

Material Specifications

Body Material: Nylon

Clamp Nuts: Zinc-Plated Steel

Color: Ivory

Face Material: Nylon

Ground Clips: Nickel-Plated Brass

Grounding Screw: Plated Brass

Line Contacts: Nickel-Plated Brass Triple-Wipe .040 Thick

Strap Material: Brass

Terminal Screws: Plated Brass

Yoke: Nickel-Plated Brass

Mechanical Specifications

Product ID: Markings are permanently marked on device

Terminal Accom.: 14-10 AWG

Terminal ID: Brass-Hot, Green-Ground, Silver-Neutral

Termination: Back or Side Wire

Torque Range: 14-16 inch pounds

Product Features

Color: Ivory

Device Type: Duplex Receptacle Outlet

Grade: Extra Heavy-Duty Hospital Grade

Grounding: Self-Grounding

NEMA: 5-15R

Strap Material: Brass

Warranty: 10-Year Limited

Feature 3: Power Indication

Feature 4: Smooth Face

Standards and Certifications

ANSI: C-73

CSA C22.2 No. 42: File 152105

NEMA: WD-6

NOM: 057

RoHS: Non-Compliant

UL498HG: File E13399

UL Fed Spec WC-596: File E13399

Warranty: 10-Year Limited

Patents*

CA2465330

US6827602

MX250328

*This list is provided for patent marking purposes only. A good faith effort is made to maintain the accuracy and completeness of this list. No legal inference should be drawn from the omission of a patent from this list.

Dimensional Diagram

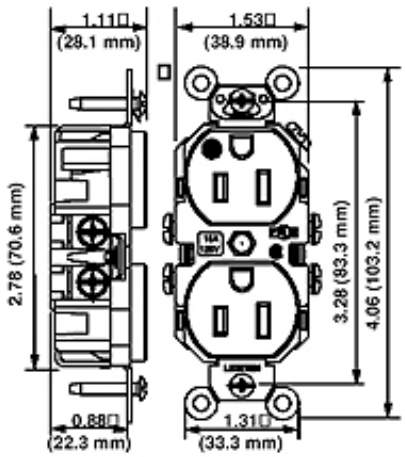

Wiring Diagram

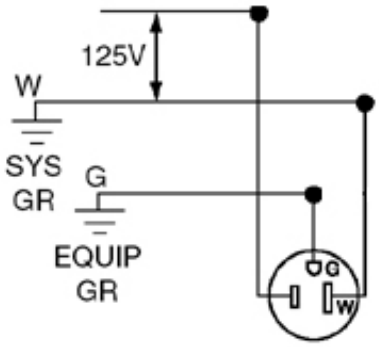

5-15R

SPECIFICATION SUBMITTAL

JOB NAME:	CATALOG NUMBERS:	
JOB NUMBER:		

Leviton Manufacturing Co., Inc.
201 North Service Road, Melville, NY 11747
Teléfono: +1-800-323-8920 · FAX: +1-800-832-9538 · Tech Line (8:30AM-7:30PM E.S.T. Monday-Friday): +1-800-824-3005

Leviton Manufacturing of Canada, Ltd.
165 Hymus Boulevard, Pointe Claire, Quebec H9R 1E9 · Telephone: +1-800-469-7890 · FAX: +1-800-824-3005 · www.leviton.com/canada

Leviton S. de R.L. de C.V.
Lago Tana 43, Mexico DF, Mexico CP 11290 · Tel.: (+52)55-5082-1040 · FAX: (+52)5386-1797 · www.leviton.com.mx

ISO 9001 REGISTERED Quality Manufacturer

Visit our Website at: www.leviton.com
© 2018 Leviton Manufacturing Co., Inc. Todos los derechos reservados. Subject to change without notice.

Leviton has a global presence.
If you would like to know where your local Leviton office is located please go to:
www.leviton.com/international/contacts/