

**Color:** Black

**UPC Code:** 07847736255

**Country Of Origin:** Mexico

**NEMA:** 5-15R




# M5262-E

### Brand Features

The Lev-Lok® Modular Wiring Device System is engineered for fast and easy installation. These devices employ a simple twist and lock wiring module that ensures a safe, reliable connection while at the same time providing for extremely fast and easy installation. Lev-Lok brand wiring devices address the reliability and performance concerns of specification engineers without sacrificing the contractor's need for fast, easy installation. Available in extra heavy duty hospital and industrial grades, and heavy duty commercial grade platforms.

### Item Description

Lev-Lok Duplex Receptacle Outlet, Extra Heavy-Duty Industrial Specification Grade, Smooth Face, 15 Amp, 125 Volt, Modular, NEMA 5-15R, 2-Pole, 3-Wire, Self-Grounding - Black<br><br>Mating Lev-Lok Wiring Module Required for Use

### Technical Information

AC Horsepower Ratings

**Horsepower Rating:** 1/2 HP

Electrical Specifications

**Amperage:** 15 A

**Voltage:** 125 VAC

**Pole:** 2

**Wire:** 3

**Grounding:** Self-Grounding

**Dielectric Voltage:** Withstands 2000V per UL498

**Maximum Working Voltage:** 125V as rated

**Current Interrupting:** Certified for current interrupting at full rated current

**Temperature Rise:** Max 30C after 250 cycles OL at 200 percent rated current

Environmental Specifications

**Flammability:** Rated V-2 per UL94

**Operating Temperature:** -40°C to 60°C

Material Specifications

**Cover Material:** Nylon

**Base Material:** Nylon

**Mounting Strap:** Brass with integral ground contact

**Ground Clips:** Brass

**Line Contacts:** 0.040” Thick Solid Brass

**Locking Pins:** Solid Brass

**Bushing:** Solid Brass

**Mounting Screws:** Triple Combination Head, Steel

Mechanical Specifications

**Product ID:** Ratings are permanently marked on device

**Termination:** Modular

Product Features

**Color:** Black

**NEMA:** 5-15R

**Device Type:** Duplex Receptacle Outlet

**Feature 4:** Smooth Face

**Grade:** Extra Heavy-Duty Industrial Specification Grade

**Brand:** Lev-Lok

Standards and Certifications

**NEMA:** WD-1 & WD-6

**cULus:** Listed

**NOM Certified:** 057

**ANSI:** C-73

**Warranty:** 10 Year Limited

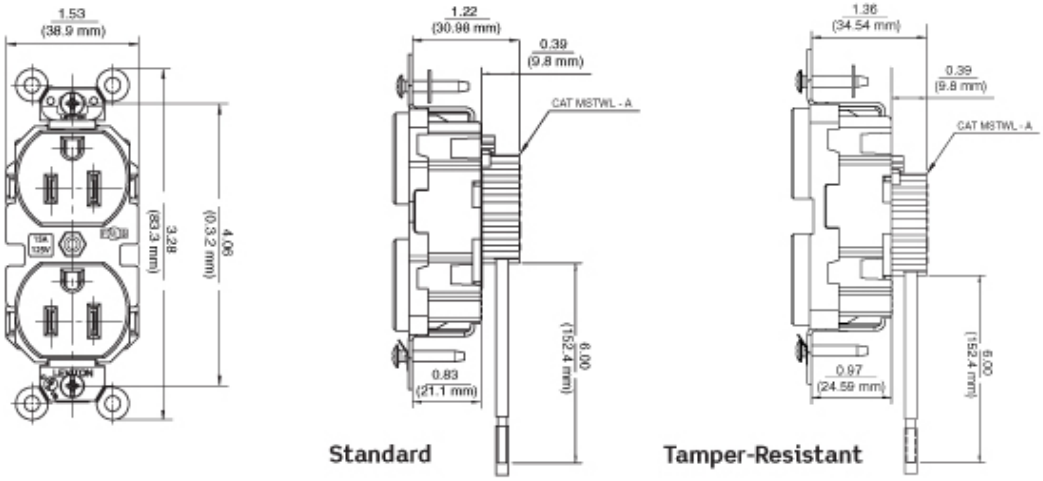


## Wiring Diagram

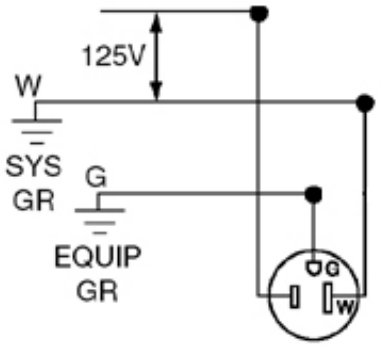


5-15R

SPECIFICATION SUBMITTAL

| JOB NAME: | CATALOG NUMBERS: | |
|---|---|---|
| | | |
| JOB NUMBER: | | |
| | | |

**Leviton Manufacturing Co., Inc.**
201 North Service Road, Melville, NY 11747
Teléfono: +1-800-323-8920 · FAX: +1-800-832-9538 · Tech Line (8:30AM-7:30PM E.S.T. Monday-Friday): +1-800-824-3005

**Leviton Manufacturing of Canada, Ltd.**
165 Hymus Boulevard, Pointe Claire, Quebec H9R 1E9 · Telephone: +1-800-469-7890 · FAX: +1-800-824-3005 · www.leviton.com/canada

**Leviton S. de R.L. de C.V.**
Lago Tana 43, Mexico DF, Mexico CP 11290 · Tel.: (+52)55-5082-1040 · FAX: (+52)5386-1797 · www.leviton.com.mx

ISO 9001 REGISTERED Quality Manufacturer

**Visit our Website at: www.leviton.com**
© 2018 Leviton Manufacturing Co., Inc. Todos los derechos reservados. Subject to change without notice.

**Leviton has a global presence.**
If you would like to know where your local Leviton office is located please go to:
www.leviton.com/international/contacts/