M5262-SGG



Color: Gray

UPC Code: 07847736266

Country Of Origin: Mexico

NEMA: 5-15R



Brand Features

The Lev-Lok® Modular Wiring Device System is engineered for fast and easy installation. These devices employ a simple twist and lock wiring module that ensures a safe, reliable connection while at the same time providing for extremely fast and easy installation. Lev-Lok brand wiring devices address the reliability and performance concerns of specification engineers without sacrificing the contractor's need for fast, easy installation. Available in extra heavy duty hospital and industrial grades, and heavy duty commercial grade platforms.

Item Description

Lev-Lok Duplex Receptacle Outlet, Extra Heavy-Duty Industrial Specification Grade, Tamper-Resistant, Smooth Face, 15 Amp, 125 Volt, Modular, NEMA 5-15R, 2-Pole, 3-Wire, Self-Grounding - Gray

Mating Lev-Lok Wiring Module Required for Use

Technical Information

AC Horsepower Ratings

Horsepower Rating: 1/2 HP

Electrical Specifications

Amperage: 15 A

Voltage: 125 VAC

Grounding: Self-Grounding

Pole: 2

Wire: 3

Dielectric Voltage: Withstands 2000V per UL498

Maximum Working Voltage: 125V as rated

Current Interrupting: Certified for current interrupting at full rated current

Temperature Rise: Max 30C after 250 cycles OL at 200 percent rated current

Environmental Specifications

Flammability: Rated V-2 per UL94

Operating Temperature: -40°C to 60°C

Material Specifications

Cover Material: Nylon

Base Material: Nylon

Mounting Strap: Brass with integral ground contact

Ground Clips: Brass

Line Contacts: 0.040” Thick Solid Brass

Locking Pins: Solid Brass

Bushing: Solid Brass

Mounting Screws: Triple Combination Head, Steel

Shutter Mechanism: Delrin® Acetal

Mechanical Specifications

Termination: Modular

Product ID: Ratings are permanently marked on device

Product Features

Color: Gray

NEMA: 5-15R

Device Type: Duplex Receptacle Outlet

Feature 2: Tamper-Resistant

Feature 4: Smooth Face

Grade: Extra Heavy-Duty Industrial Specification Grade

Brand: Lev-Lok

Standards and Certifications

NEMA: WD-1 & WD-6

cULus: Listed

NOM Certified: 057

ANSI: C-73

Warranty: 10 Year Limited

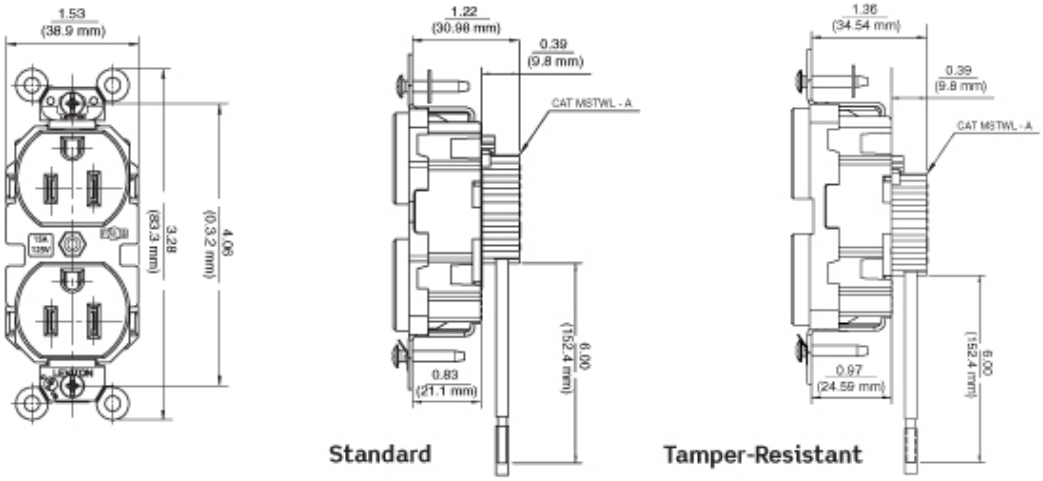

Wiring Diagram

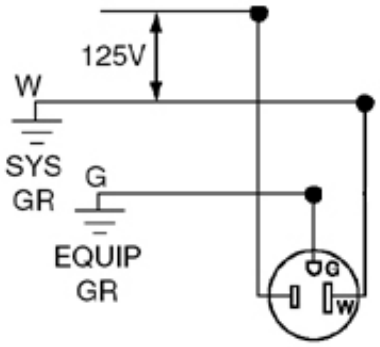

5-15R

SPECIFICATION SUBMITTAL

JOB NAME:	CATALOG NUMBERS:	
JOB NUMBER:		

Leviton Manufacturing Co., Inc.
201 North Service Road, Melville, NY 11747
Teléfono: +1-800-323-8920 · FAX: +1-800-832-9538 · Tech Line (8:30AM-7:30PM E.S.T. Monday-Friday): +1-800-824-3005

Leviton Manufacturing of Canada, Ltd.
165 Hymus Boulevard, Pointe Claire, Quebec H9R 1E9 · Telephone: +1-800-469-7890 · FAX: +1-800-824-3005 · www.leviton.com/canada

Leviton S. de R.L. de C.V.
Lago Tana 43, Mexico DF, Mexico CP 11290 · Tel.: (+52)55-5082-1040 · FAX: (+52)5386-1797 · www.leviton.com.mx

ISO 9001 REGISTERED Quality Manufacturer

Visit our Website at: www.leviton.com
© 2018 Leviton Manufacturing Co., Inc. Todos los derechos reservados. Subject to change without notice.

Leviton has a global presence.
If you would like to know where your local Leviton office is located please go to:
www.leviton.com/international/contacts/