

Color: N/A Light Almond

UPC Code: 07847736343

Country Of Origin: Mexico

NEMA: 5-20R



M5362-IGT

Brand Features

The Lev-Lok® Modular Wiring Device System is engineered for fast and easy installation. These devices employ a simple twist and lock wiring module that ensures a safe, reliable connection while at the same time providing for extremely fast and easy installation. Lev-Lok brand wiring devices address the reliability and performance concerns of specification engineers without sacrificing the contractor's need for fast, easy installation. Available in extra heavy duty hospital and industrial grades, and heavy duty commercial grade platforms.

Item Description

Lev-Lok Isolated Ground Duplex Receptacle Outlet, Heavy-Duty Industrial Specification Grade, Smooth Face, 20 Amp, 125 Volt, Modular, NEMA 5-20R, 2-Pole, 3-Wire, Self-Grounding - Light Almond

Mating Lev-Lok Wiring Module Required for Use

Technical Information

AC Horsepower Ratings

Horsepower Rating: 1 HP

Electrical Specifications

Amperage: 20 A

Voltage: 125 VAC

Pole: 2

Wire: 3

Dielectric Voltage: Withstands 2000V per UL498

Current Limiting: Full Rated Current

Temperature Rise: Max 30C after 250 cycles OL at 200 percent rated current

Grounding: Self-Grounding

Environmental Specifications

Flammability: Rated V-2 per UL94

Operating Temperature: -40°C to 60°C

Material Specifications

Body Material: Nylon

Face Material: Nylon

Strap Material: Galvanized Steel

Line Contacts: 0.040" Thick Solid Brass

Locking Pins: Solid Brass

Isolated Ground System: Brass

Ground Clips: Brass

Shutter Mechanism: Delrin® Acetal

Color: Light Almond

Mechanical Specifications

Lead Identification: Leads identified in accordance with UL 498 (black, white & green)

Product ID: Markings are permanently marked on device

Termination: Modular

Product Features

NEMA: 5-20R

Color: Light Almond

Device Type: Duplex Receptacle Outlet

Feature 4: Smooth Face

Function: Isolated Ground

Grade: Heavy-Duty Industrial Specification Grade

Brand: Lev-Lok

Standards and Certifications

NEMA: WD-6

ANSI: C-73

UL 498: File E13399

UL Fed Spec WC-596: File E13399

CSA C22.2 No. 42: File 152105

NOM: 057

Warranty: 10-Year Limited

RoHS: Compliant

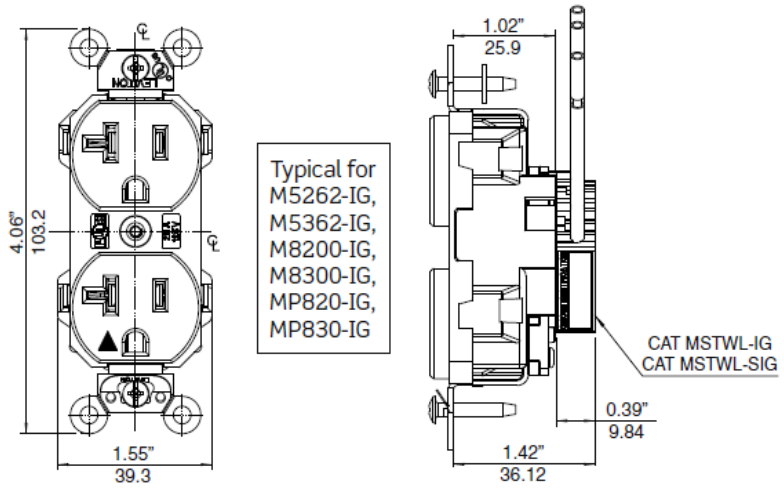

Wiring Diagram

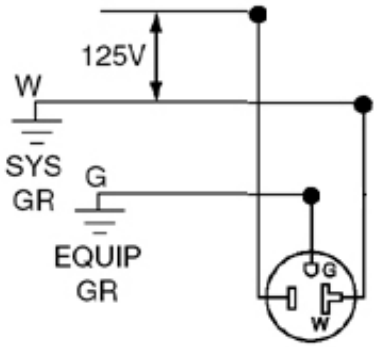

5-20R

SPECIFICATION SUBMITTAL

JOB NAME:	CATALOG NUMBERS:	
JOB NUMBER:		

Leviton Manufacturing Co., Inc.
201 North Service Road, Melville, NY 11747
Teléfono: +1-800-323-8920 · FAX: +1-800-832-9538 · Tech Line (8:30AM-7:30PM E.S.T. Monday-Friday): +1-800-824-3005

Leviton Manufacturing of Canada, Ltd.
165 Hymus Boulevard, Pointe Claire, Quebec H9R 1E9 · Telephone: +1-800-469-7890 ·
FAX: +1-800-824-3005 · www.leviton.com/canada

Leviton S. de R.L. de C.V.
Lago Tana 43, Mexico DF, Mexico CP 11290 · Tel.: (+52)55-5082-1040 · FAX: (+52)5386-1797 · www.leviton.com.mx

ISO 9001 REGISTERED Quality Manufacturer

Visit our Website at: www.leviton.com
© 2018 Leviton Manufacturing Co., Inc. Todos los derechos reservados. Subject to change without notice.

Leviton has a global presence.
If you would like to know where your local Leviton office is located please go to:
www.leviton.com/international/contacts/