# M8200-I



**Color:** Ivory

**UPC Code:** 07847736358

**Country Of Origin:** Mexico

**NEMA:** 5-15R




### Item Description

Lev-Lok Duplex Receptacle Outlet, Extra Heavy-Duty Hospital Grade, Smooth Face, 15 Amp, 125 Volt, Modular, NEMA 5-15R, 2-Pole, 3-Wire, Self-Grounding - Ivory<br><br>Mating Lev-Lok Wiring Module Required for Use

### Technical Information

AC Horsepower Ratings

**Horsepower Rating:** 1/2 HP

Electrical Specifications

**Amperage:** 15 A

**Current Interrupting:** Certified for current interrupting at full rated current

**Dielectric Voltage:** Withstands 2000V per UL498

**Grounding:** Self-Grounding

**Maximum Working Voltage:** 125V as rated

**Pole:** 2

**Temperature Rise:** Max 30C after 250 cycles OL at 200 percent rated current

**Voltage:** 125 VAC

**Wire:** 3

Environmental Specifications

**Flammability:** Rated V-2 per UL94

**Operating Temperature:** -40°C to 60°C

Material Specifications

**Base Material:** Nylon

**Bushing:** Solid Brass

**Cover Material:** Nylon

**Ground Clips:** Nickel-Plated Brass

**Line Contacts:** 0.040” Thick Solid Brass

**Locking Pins:** Solid Brass

**Mounting Screws:** Triple Combination Head, Steel

**Mounting Strap:** Single Piece Nickel-Plated Brass with integral ground contact

Mechanical Specifications

**Product ID:** Ratings are permanently marked on device

**Termination:** Modular

Product Features

**Brand:** Lev-Lok

**Color:** Ivory

**Device Type:** Duplex Receptacle Outlet

**Grade:** Extra Heavy-Duty Hospital Grade

**NEMA:** 5-15R

**Feature 4:** Smooth Face

Standards and Certifications

**ANSI:** C-73

**cULus:** Listed

**NEMA:** WD-1 & WD-6

**NOM Certified:** 057

**Warranty:** 10 Year Limited

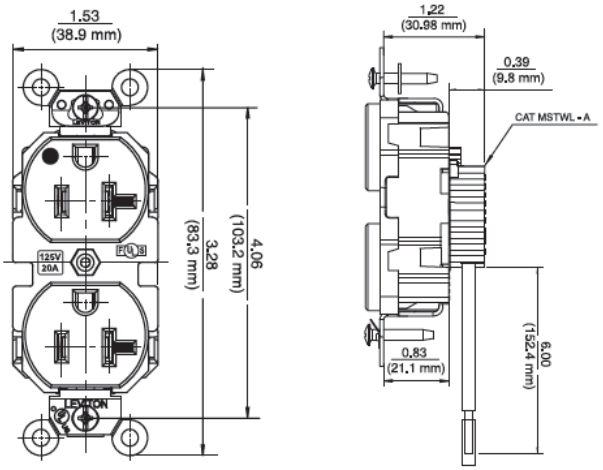


Standard

## Wiring Diagram

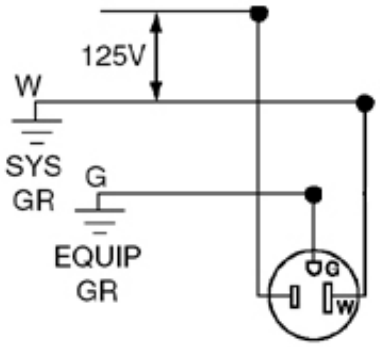


5-15R

SPECIFICATION SUBMITTAL

| JOB NAME: | CATALOG NUMBERS: | |
|---|---|---|
| | | |
| JOB NUMBER: | | |

**Leviton Manufacturing Co., Inc.**
201 North Service Road, Melville, NY 11747
Teléfono: +1-800-323-8920 · FAX: +1-800-832-9538 · Tech Line (8:30AM-7:30PM E.S.T. Monday-Friday): +1-800-824-3005

**Leviton Manufacturing of Canada, Ltd.**
165 Hymus Boulevard, Pointe Claire, Quebec H9R 1E9 · Telephone: +1-800-469-7890 ·
FAX: +1-800-824-3005 · www.leviton.com/canada

**Leviton S. de R.L. de C.V.**
Lago Tana 43, Mexico DF, Mexico CP 11290 · Tel.: (+52)55-5082-1040 · FAX: (+52)5386-1797 · www.leviton.com.mx

ISO 9001 REGISTERED Quality Manufacturer

**Visit our Website at: www.leviton.com**
© 2018 Leviton Manufacturing Co., Inc. Todos los derechos reservados. Subject to change without notice.

**Leviton has a global presence.**
If you would like to know where your local Leviton office is located please go to:
www.leviton.com/international/contacts/