M8200-PLG



Color: Gray

UPC Code: 07847744268

Country Of Origin: Mexico

NEMA: 5-15R



Item Description

Lev-Lok Duplex Receptacle Outlet, Extra Heavy-Duty Hospital Grade, Power Indication, Smooth Face, 15 Amp, 125 Volt, Modular, NEMA 5-15R, 2-Pole, 3-Wire, Self-Grounding - Gray

Mating Lev-Lok Wiring Module Required for Use

Technical Information

AC Horsepower Ratings

Horsepower Rating: 1/2 HP

Electrical Specifications

Amperage: 15 A

Current Interrupting: Certified for current interrupting at full rated current

Dielectric Voltage: Withstands 2000V per UL498

Grounding: Self-Grounding

Maximum Working Voltage: 125V as rated

Pole: 2

Temperature Rise: Max 30C after 250 cycles OL at 200 percent rated current

Voltage: 125 VAC

Wire: 3

Environmental Specifications

Flammability: Rated V-2 per UL94

Operating Temperature: -40°C to 60°C

Material Specifications

Base Material: Nylon

Bushing: Solid Brass

Cover Material: Nylon

Ground Clips: Nickel-Plated Brass

Line Contacts: 0.040” Thick Solid Brass

Locking Pins: Solid Brass

Mounting Screws: Triple Combination Head, Steel

Mounting Strap: Single Piece Nickel-Plated Brass with integral ground contact

Mechanical Specifications

Product ID: Ratings are permanently marked on device

Termination: Modular

Product Features

Brand: Lev-Lok

Color: Gray

Device Type: Duplex Receptacle Outlet

Grade: Extra Heavy-Duty Hospital Grade

NEMA: 5-15R

Feature 3: Power Indication

Feature 4: Smooth Face

Standards and Certifications

ANSI: C-73

cULus: Listed

NEMA: WD-1 & WD-6

NOM Certified: 057

Warranty: 10 Year Limited

Patents*

CA2465330

US6827602

MX250328

*This list is provided for patent marking purposes only. A good faith effort is made to maintain the accuracy and completeness of this list. No legal inference should be drawn from the omission of a patent from this list.

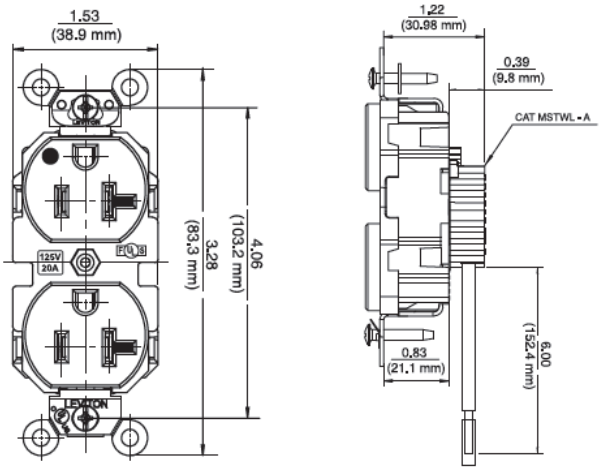

Standard

Wiring Diagram

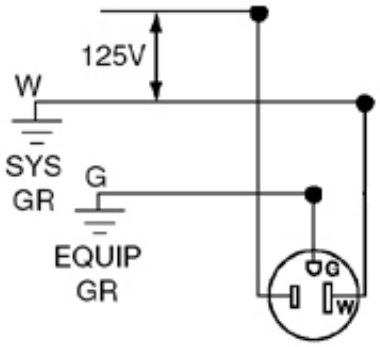

5-15R

SPECIFICATION SUBMITTAL

JOB NAME:	CATALOG NUMBERS:	
JOB NUMBER:		

Leviton Manufacturing Co., Inc.
201 North Service Road, Melville, NY 11747
Teléfono: +1-800-323-8920 · FAX: +1-800-832-9538 · Tech Line (8:30AM-7:30PM E.S.T. Monday-Friday): +1-800-824-3005

Leviton Manufacturing of Canada, Ltd.
165 Hymus Boulevard, Pointe Claire, Quebec H9R 1E9 · Telephone: +1-800-469-7890 ·
FAX: +1-800-824-3005 · www.leviton.com/canada

Leviton S. de R.L. de C.V.
Lago Tana 43, Mexico DF, Mexico CP 11290 · Tel.: (+52)55-5082-1040 · FAX: (+52)5386-1797 · www.leviton.com.mx

ISO 9001 REGISTERED Quality Manufacturer

Visit our Website at: www.leviton.com
© 2018 Leviton Manufacturing Co., Inc. Todos los derechos reservados. Subject to change without notice.

Leviton has a global presence.
If you would like to know where your local Leviton office is located please go to:
www.leviton.com/international/contacts/