

Color: Brown

UPC Code: 07847789257

Country Of Origin: Mexico

NEMA: 5-20R



WDR20

Item Description

Decora Plus Duplex Receptacle Outlet, Heavy-Duty Industrial Specification Grade, Weather-Resistant, Smooth Face, 20 Amp, 125 Volt, Back or Side Wire, NEMA 5-20R, 2-Pole, 3-Wire, Self-Grounding - Brown

Technical Information

AC Horsepower Rating

Horsepower Rating: 1 HP

Electrical Specifications

Amperage: 20 A

Dielectric Voltage: Withstands 3000 V minimum

Grounding: Self-Grounding

Pole: 2

Temperature Rise: Max 30 °C after 250 cycles OL at 200 percent rated current

Voltage: 125 VAC

Wire: 3

Environmental Specifications

Flammability: Rated V-0 per UL 94

Operating Temperature: -40°C to 75°C

Material Specifications

Body Material: PBT Polyester Blend

Face Material: PBT Polyester Blend

Ground Clips: Brass

Ground Contacts: 0.030" Brass

Grounding Screw: #8 hex head, triple drive Brass

Line Contacts: 0.030" Phosphor Bronze

Mounting Screws: Triple-Drive Plated Steel

Strap Material: Steel

Terminal Clamps: Brass

Terminal Screws: #8 Triple-Drive Brass

Mechanical Specifications

Product ID: Ratings are permanently marked on device

Terminal Accom.: #14 AWG - #10 AWG

Terminal ID: Brass - Hot, Green - Ground, Silver - Neutral

Termination: Back or Side Wire

Wire Type: Stranded or Solid

Product Features

Color / Feature: Brown

Device Type: Duplex Receptacle Outlet

Feature: Weather-Resistant

Grade: Heavy-Duty Industrial Specification Grade

NEMA: 5-20R

Color: Brown

Feature 2: Weather-Resistant

Feature 4: Smooth Face

Standards & Certifications

ANSI: C-73

Applicable Standards: UL 498, Fed Spec W-C-596, CSA C22.2. No. 42

Certification/Listing: cULus, NOM-ANCE

NEMA: WD 1 & WD 6

RoHS: RoHS Compliant

Patents*

CA2483480	US6743029
MX257790	US8684771
MX321216	

*This list is provided for patent marking purposes only. A good faith effort is made to maintain the accuracy and completeness of this list. No legal inference should be drawn from the omission of a patent from this list.

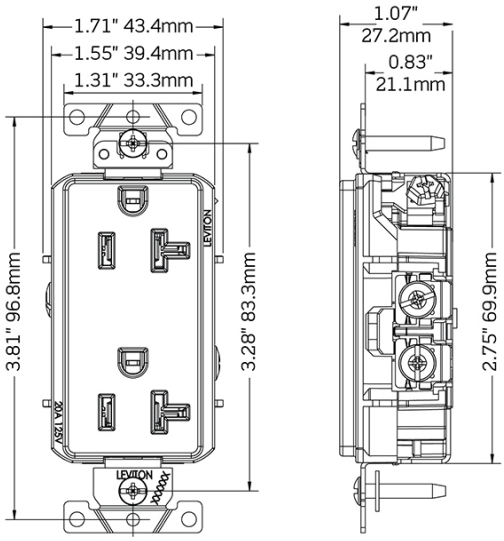

SPECIFICATION SUBMITTAL

JOB NAME:	CATALOG NUMBERS:	
JOB NUMBER:		

Leviton Manufacturing Co., Inc.
201 North Service Road, Melville, NY 11747
Teléfono: +1-800-323-8920 · FAX: +1-800-832-9538 · Tech Line (8:30AM-7:30PM E.S.T. Monday-Friday): +1-800-824-3005

Leviton Manufacturing of Canada, Ltd.
165 Hymus Boulevard, Pointe Claire, Quebec H9R 1E9 · Telephone: +1-800-469-7890 ·
FAX: +1-800-824-3005 · www.leviton.com/canada

Leviton S. de R.L. de C.V.
Lago Tana 43, Mexico DF, Mexico CP 11290 · Tel.: (+52)55-5082-1040 · FAX: (+52)5386-1797 · www.leviton.com.mx

ISO 9001 REGISTERED Quality Manufacturer

Visit our Website at: www.leviton.com
© 2018 Leviton Manufacturing Co., Inc. Todos los derechos reservados. Subject to change without notice.

Leviton has a global presence.
If you would like to know where your local Leviton office is located please go to:
www.leviton.com/international/contacts/