THIS COPY IS PROVIDED ON A RESTRICTED BASIS AND IS NOT TO BE USED IN ANY WAY DETRIMENTAL TO THE INTERESTS OF PANDUIT CORP.

PANDUIT P/N	WEIGHT
H1B1B1L2N10AXA0	4.7kg (10.36lbs)

NOTES:
1. IDENTIFICATION: 1RU HORIZONTAL, (10) C13 BASIC 208V / 30A / SINGLE-PHASE PDU

PART NO.	COLOR
H1B1B1L2N10AXA0	BLACK

2. ACCESSORY COMPONENTS:
   (1) QUICK-START GUIDE
   (4) M6 X 20mm SCREWS
   (4) 12-24 X 1/2" SCREWS
3. PRIMARY DIMENSIONS ARE IN MILLIMETERS, SECONDARY DIMENSIONS IN [INCHES].
4. RoHS COMPLIANT.
5. VISIT OUR ON-LINE CATALOG AT WWW.PANDUIT.COM FOR A CURRENT LIST OF PRODUCTS APPLICABLE FOR USE WITH THIS PART.
6. MAXIMUM AVAILABLE INPUT POWER = 4.9 kW
7. INSTALLATION SHALL COMPLY WITH ALL APPLICABLE NATIONAL, STATE, AND LOCAL CODES.
8. PRINTED WITH PHASE & CIRCUIT IDENTIFICATION.

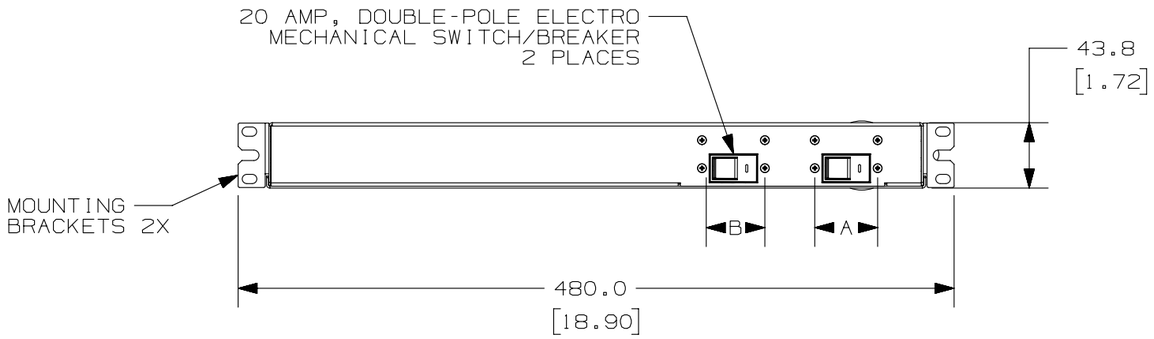

FRONT VIEW

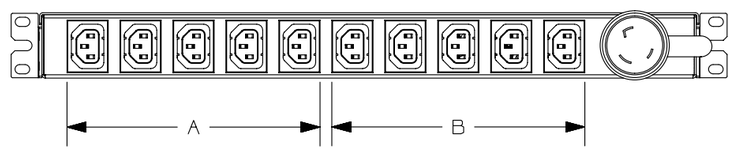

REAR VIEW

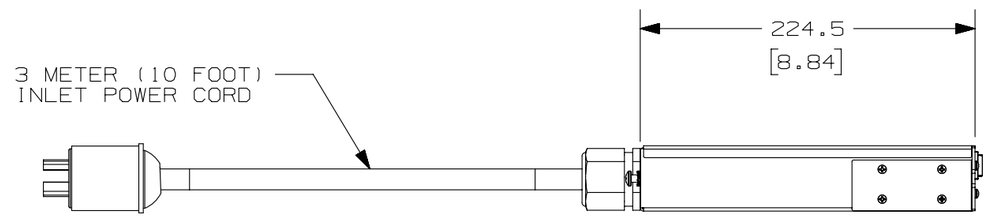

SIDE VIEW

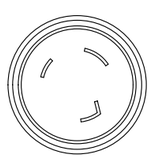

PLUG
30 AMP, 250V
TWIST LOCK
NEMA L6-30P

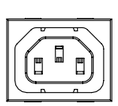

TEN (10)
RECEPTACLES
15 AMP, 250V
STRAIGHT BLADE
IEC 60320/C13

REV	DATE	BY	CHK	APR	DESCRIPTION	ECN
00A	09-19-14	SAT	MRWA	EDM	RELEASED TO PRODUCTION	12V092CX-DC

WE ASK THAT YOU CHECK FULLY THE DIMENSIONS, NOTES, AND SIGN THE CLIENT SIGNATUTE BOX.

THE JOB WILL NOT PROGRESS WITHOUT SIGNED APPROVAL. PLEASE DO NOT DELAY IN RETURNING PROOF AS IT WILL AFFECT DELIVERY.

SIGN
DATE
PRINT

TITLE
BASIC PDU
(10) C13
CUSTOMER DRAWING

ITEM REVISION NAME: 12V092CX/00

DATASET FILE NAME: 12V092CX_DC/00A

UNLESS OTHERWISE SPECIFIED, DIMENSIONAL TOLERANCES ARE:

INCHES		METRIC - MILLIMETER		ANGLE
X.X	+/- 0.03	X.	+/- 0.8	+/- 1°
X.XX	+/- 0.018	X.X	+/- 0.46	
X.XXX	+/- 0.007	X.XX	+/- 0.18	

THIRD ANGLE PROJECTION

MATERIAL/COLOR: N/A

DRAWING NUMBER: 12V092CX-DC

DRAWN BY	DATE	CHK	SCALE		SIZE
SAT	09-10-14	MRWA	NONE	SHT 1 OF 1	B