THIS COPY IS PROVIDED ON A RESTRICTED BASIS AND IS NOT TO BE USED IN ANY WAY DETRIMENTAL TO THE INTERESTS OF PANDUIT CORP.

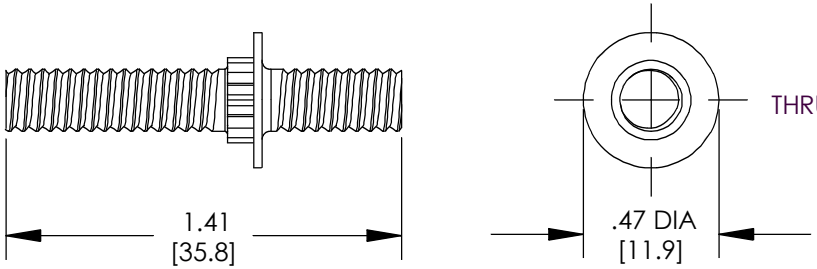


THRU-HOLE BONDING STUD (QTY. 25)

NOTES:

1. THRU-HOLE BONDING STUD KIT PART NUMBER: THBSK
2. PACKAGING: 4 KITS PER BOX
3. DIMENSIONS IN PARENTHESIS ARE MILLIMETERS.
4. ALL COMPONENTS THAT MAKE UP THIS KIT ARE RoHS COMPLIANT.

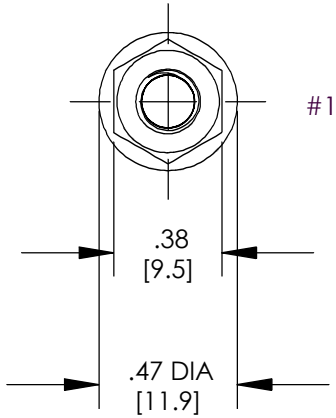


#12-24 BONDING NUT (QTY. 50)

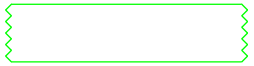

5cc TUBE ANTI-OXIDANT PASTE (QTY. 1)

C41699_00

| REV | DATE | BY | CHK | DESCRIPTION | ECN | PM | CUST |
|---|---|---|---|---|---|---|---|
| 00 | 2/07 | JHNU | JMAR | DRAWING RELEASED | PC00674 | | |

PANDUIT CORP. TINLEY PARK, ILLINOIS

THRU-HOLE BONDING STUD KIT
(THBSK)
CUSTOMER DRAWING

| DRAWN BY | CHK'D | SCALE | DRAWING NO / CAD FILE |
|---|---|---|---|
| JHNU | | NONE | C41699 |