DRAWING NO. SE211915

REV	DATE	DESCRIPTION	ECO	BY	C'H'K.
B	06/26/2014 09:30:00 AM	CAT. # YAZ2C2TC38E7 ADDED.	36681	AD	BSB

CATALOG NO.	CONDUCTOR CODE (AWG)	CONDUCTOR NAVY ⟨5⟩	BOLT SIZE	FIG. NO.	B ±.06	C +.04	E ±.02	H REF.	K DIA. ±.02	L ±.09	N ±.04	O.D. ±.01	T REF.	Y MIN.	DIE INDEX	COLOR CODE	MECHANICAL RATCHET MD7-34R MD6	MECHANICAL RATCHET OUR840	MECHANICAL RATCHET Y2MR	HYDRAULIC Y34A ⟨7⟩	HYDRAULIC Y750 Y35, PAT35 Y39, PAT750	HYDRAULIC Y46 ⟨4⟩	HYDRAULIC Y45 ⟨3⟩	DIELESS (# CRIMPS)	WIRE STRIP LENGTH
YAZ2C2TC516	#2 AWG [----]	60	5/16 [M8]	1	1.25 [32]	.60 [15]	1.00 [25]	----	.33 [8]	3.28 [83]	.34 [9]	.42 [11]	.11 [3]	1.37 [35]	10	BROWN	W2CVT W2CRT (2)	W2CVT W2CRT (2)	----	A2CR (2)	U2CRT (2)	U2CRT (2)	U2CRT (2)	MECHANICAL: MY29-11 (1) HYDRAULIC: Y644, Y644M Y644MBH, Y1000 Y1000BH (1)	1-5/16
YAZ2C2TC51645				2				1.42 [36]		3.09 [78]															
YAZ2C2TC51690				3				1.74 [44]		2.02 [51]															
YAZ2C2TC516E2			5/16 [M8]	1			.75 [19]	----	.33 [8]	3.03 [77]	.34 [9]			1.12 [28]											
YAZ2C2TC516E245				2				1.42 [36]		2.84 [72]															
YAZ2C2TC516E290				3				1.74 [44]		1.77 [45]															
YAZ2C2TC38E2			3/8 [M10]	1			.75 [19]	----	.40 [10]	3.16 [80]	.41 [10]			1.18 [30]											
YAZ2C2TC38E245				2				1.42 [36]		2.96 [75]															
YAZ2C2TC38E290				3				1.74 [44]		1.90 [48]															
YAZ2C2TC38E7	#2 AWG [----]	60		1	1.25 [32]	.60 [15]	.63 [16]	--		3.04 [77]		.42 [11]	.11 [3]	1.06 [27]	10	BROWN	W2CVT W2CRT (2)	W2CVT W2CRT (2)	----	A2CR (2)	U2CRT (2)	U2CRT (2)	U2CRT (2)		1-5/16

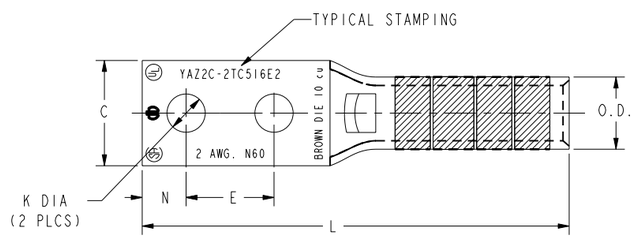

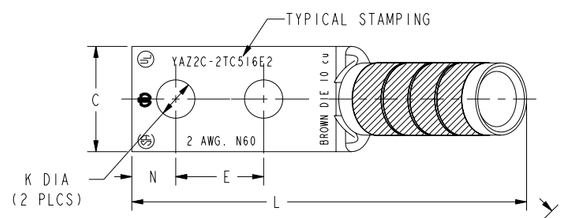

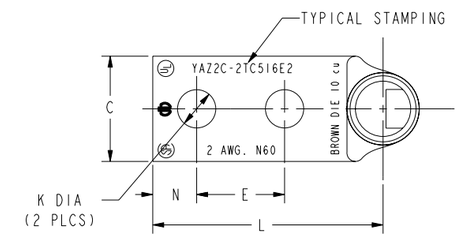

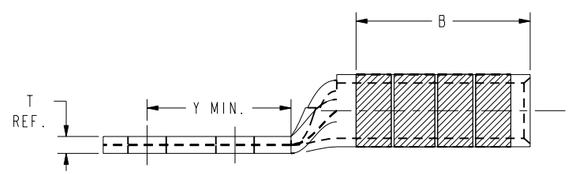

FIG 1

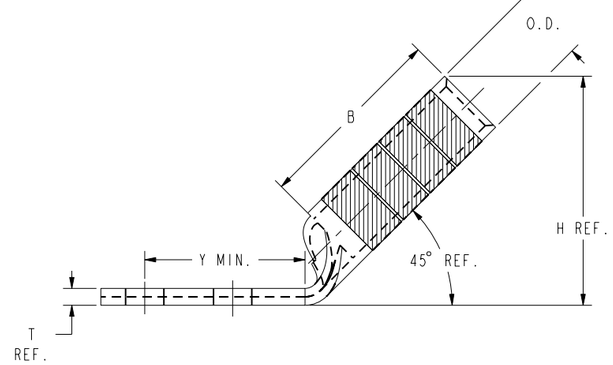

FIG 2

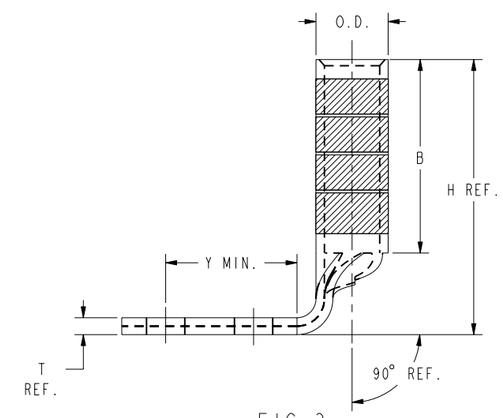

FIG 3

NOTES:

1. MATERIAL: COPPER TUBING.
2. FINISH: TIN PLATED
3. ⟨3⟩ CATALOG # PT6515 ADAPTOR IS REQUIRED TO USE "U" DIES IN Y45 SERIES TOOLS.
4. ⟨4⟩ CATALOG # PUADP-1 ADAPTOR IS REQUIRED TO USE "U" DIES IN Y46 SERIES TOOLS.
5. ⟨5⟩ NAVY CABLE SIZE MAY BE OMITTED ON SOME SIZES BECAUSE OF SPACE LIMITATIONS.
6. DIMENSIONS, METRIC WIRE, & METRIC BOLT SIZES IN BRACKETS [ ] ARE IN MILLIMETERS. DIMENSIONS ARE ROUNDED OFF TO THE NEAREST MILLIMETER, UNLESS OTHERWISE NOTED, AND ARE FOR REFERENCE ONLY.
7. ⟨7⟩ FOR USE BY CUSTOMERS THAT HAVE THIS HYPRESS™ NO NEW Y34A HYPRESS™ ARE BEING PROCESSED.

REV: PE0200

TO ORDER BURNDY® PRODUCTS CALL

UNITED STATES
1-800-346-4175 (LONDONDERRY, NH)

CANADA:
1-800-361-6975 (QUEBEC)
1-800-387-6487 (ALL OTHER PROVINCES)

FOR PRODUCT INFO: http://www.burndy.com

HYLUG™

ITEM NO:	N/A		
CAT. NO:	YAZ2C-2TC- (SEE TABLE)		
DRAWN BY:	D.BOISVERT	11/12/98	BURNDY
CHECKER:	K.HENRY	12/03/98	
DSN APPVL:	B.MACDONALD	12/02/98	
MFG APPVL:	N/A	--	
QA APPVL:	S.GRAY	11/30/98	
MKT APPVL:	B.HARDGROVE	11/25/98	SCALE: 4:1
PROD FAM:	--	DRAWING NO	REV
PROJECT #:	--	SE211915	B
DOCUMENT TYPE:	Sales	SIZE D	
REL LEVEL:	Released	SHEET 15 OF 36	