PHILIPS

Lighting

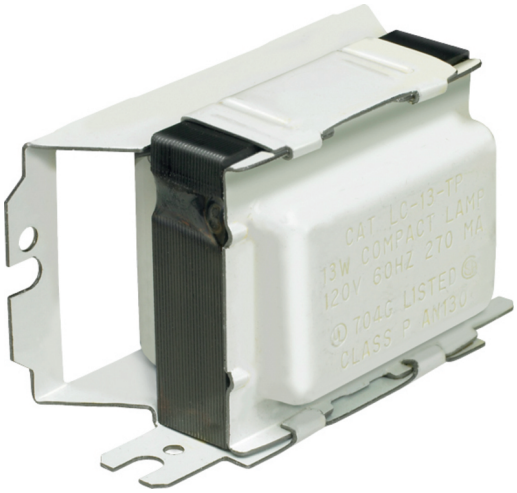

Standard

STANDARD LC1420CTPM

Available for many fluorescent lamp types sold today, including Preheat, Rapid Start, 2-pin CFL, Slimline, High Output, Very High Output and Circline. Magnetic ballasts can be used in any application where these lamps are used.

Product data

General Information	
Lamp Type	F20T12
Number of Lamps	1 piece/unit
Lamp Footage	-
Ballast Type	Magnetic Fluorescent
Base Model	LC1420CTP
Suitable For Outdoor Use	Yes
Automatic Restart	Yes

Operating and Electrical	
Input Voltage	120 V
Input Frequency	60 Hz
Total Harmonic Distortion USA	10 %
Ignition Method	Preheat
Crestfactor (Nom)	1.5
Ignition Time (Nom)	1 s
Input Current (Open Circuit)	0
Input Current (Starting)	0.36
Ballast Factor (Nom)	0.93
Power Factor (Nom)	0.52
Input Current (Nom)	0.33 A
Input Power (Nom)	21 W
Rated Lamp Power	20 W

Wiring	
Wire Striplength	0.50/0.375 mm
Lamp Connection	Series
Wire Length by Color	See data sheet
Wire Gauge (Nom)	18AWG mm
Wire Type	Solid
Remote Wiring Configuration Allowed	Yes
Tandem Wiring Configuration Allowed	No
Through Wiring Configuration Allowed	No
Max Ballast-Lamp Distance Remote Wiring	30'
Max Ballast-Lamp Distance Tandem Wiring	-
Max Ballast-Lamp Distance Through Wiring	-

Mechanical and Housing	
Housing Material	Metal
Housing	C2
Housing Dimensions	1.06" x 1.59" x 1.81"

Approval and Application	
EMC Immunity Standard	FCC Non-Consumer
Approval Marks	CSA certificate UL certificate RoHS Compliant
Hum And Noise Level	A
UL Recognized	No

Standard

Product Data	
Order product name	STANDARD LC1420CTPM
EAN/UPC - Product	781087003480
Order code	913700507271
Numerator - Quantity Per Pack	1

Numerator - Packs per outer box	50
Material Nr. (12NC)	913700507271
Net Weight (Piece)	286.000 g

Dimensional drawing

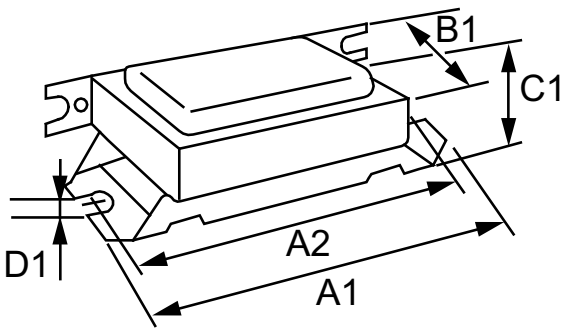

MAG BALLAST (1) F20T12 PH 120V

Product	A1	A2	B1	C1	D1
STANDARD LC1420CTPM	3.06 in	2.75 in	1.81 in	1.59 in	0.19 in

© 2016 Philips Lighting Holding B.V. All rights reserved. Philips Lighting reserves the right to make changes in specifications and/or to discontinue any product at any timewithout notice or obligation and will not be liable for any consequences resulting from the use of this publication.