SIEMENS

Data sheet 3RA6812-8AB

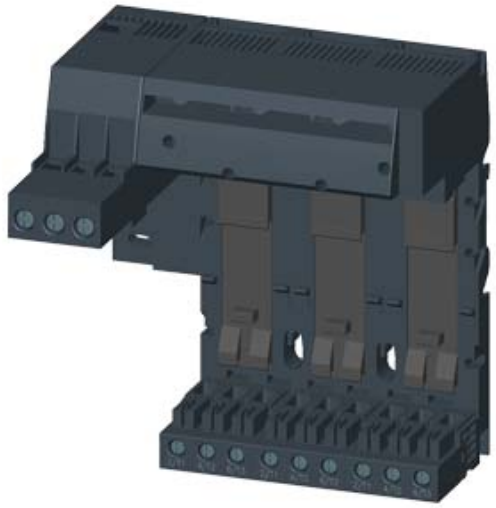

INFEED ON THE LEFT, CONNECTION MAIN CIRCUIT: SCREW TERMINAL, 3 SLOTS FOR COMPACT LOAD FEEDERS TERMINAL MAX. 25 MM2 / 35 MM2

General technical data:		
product brand name		SIRIUS
Product designation		infeed left
Protection class IP		IP20
Degree of pollution		3
Number of slots for compact feeder		3
Installation altitude at height above sea level maximum	m	2 000
Ambient temperature		
• during transport	°C	-55 ... +80
• during storage	°C	-55 ... +80
• during operation	°C	-20 ... +60
Vibration resistance		f = 4 to 5.8 Hz; d = 15 mm; f = 5.8 to 500 Hz; a = 2 m / s2 10 cycles
Shock resistance		Semi-sinusoidal a = 6 m/s2 at 10 ms; 3 pos. and 3 neg. Shock in all axes
Equipment marking acc. to DIN EN 61346-2		W
Equipment marking acc. to DIN 40719 extended according to IEC 204-2 acc. to IEC 750		W

Main circuit:		
Operating current with AC at 400 V Rated value	A	63
Operating voltage at AC-3 Rated value maximum	V	690

Installation/ mounting/ dimensions:		
Mounting type		screw and snap-on mounting
Width	mm	180

Changes preserved
© Copyright Siemens AG

Height	mm	197
Depth	mm	144

Connections/ Terminals:		
Type of electrical connection for main current circuit		screw-type terminals
Design of screw-type connection for main contacts		M3
Wire stripping length for main contacts	mm	13
Tightening torque for main contacts with screw-type terminals	N·m	3 ... 4.5
Connectable conductor cross-section for supply for main contacts using the upper clamping point		
• solid	mm²	2.5 ... 35
• stranded	mm²	2.5 ... 35
• finely stranded with core end processing	mm²	2.5 ... 25
• finely stranded without core end processing	mm²	2.5 ... 25
Connectable conductor cross-section for supply for main contacts using the lower clamping point		
• solid	mm²	2.5 ... 35
• stranded	mm²	2.5 ... 35
• finely stranded with core end processing	mm²	2.5 ... 25
• finely stranded without core end processing	mm²	2.5 ... 25
Connectable conductor cross-section for supply for main contacts using both clamping points		
• solid	mm²	2 ... 25
• stranded	mm²	2 ... 25
• finely stranded with core end processing	mm²	2 ... 16
• finely stranded without core end processing	mm²	2 ... 16
AWG number as coded connectable conductor cross section for supply for main contacts		
• using the upper clamping point		12 ... 2
• using the lower clamping point		12 ... 2
• using both clamping points		16 ... 2
Type of connectable conductor cross-section for supply for main contacts using the upper clamping point		
• solid		2.5 ... 35 mm²
• stranded		2.5 ... 35 mm²
• finely stranded with core end processing		2.5 ... 25 mm²
• finely stranded without core end processing		2.5 ... 25 mm²
Type of connectable conductor cross-section for supply for main contacts using the lower clamping point		
• solid		2.5 ... 35 mm²
• stranded		2.5 ... 35 mm²

Changes preserved
© Copyright Siemens AG

• finely stranded with core end processing		2.5 ... 25 mm²
• finely stranded without core end processing		2,5 ... 25 mm²
Type of connectable conductor cross-section for supply for main contacts using both clamping points		
• solid		2 x (2.5 ... 25 mm²)
• stranded		2 x (2.5 ... 25 mm²)
• finely stranded with core end processing		2 x (2.5 ... 16 mm²)
• finely stranded without core end processing		2 x (2.5 ... 16 mm²)
Type of connectable conductor cross-section for AWG conductors for supply for main contacts		
• using the upper clamping point		12 ... 2
• using the lower clamping point		12 ... 2
• using both clamping points		2 x (16 ... 2)
Connectable conductor cross-section for main contacts for load-side outgoing feeder		
• solid	mm²	1.5 ... 10
• stranded	mm²	1.5 ... 10
• finely stranded with core end processing	mm²	1.5 ... 6
AWG number as coded connectable conductor cross section for main contacts for load-side outgoing feeder		14 ... 8
Type of connectable conductor cross-section for main contacts for load-side outgoing feeder		
• solid		2x (1.5 ... 6 mm²), 1x (1.5 ... 10 mm²)
• stranded		2x (1.5 ... 6 mm²), 1x (1.5 ... 10 mm²)
• finely stranded with core end processing		2 x (1.5 ... 6) mm²
Type of connectable conductor cross-section for AWG conductors for main contacts for load-side outgoing feeder		2 x (16 ... 10), 1 x (16 ... 8)

Certificates/ approvals:

Changes preserved
© Copyright Siemens AG

General Product Approval			EMC	Shipping Approval	
CSA	UL		C-TICK	BUREAU VERITAS	DNV

Shipping Approval				other	
LRS	PRS	RINA	RMRS	Environmental Confirmations	Declaration of Conformity

other
other

Safety related data:		
Protection against electrical shock		finger-safe

Further information

Information- and Downloadcenter (Catalogs, Brochures,…)
http://www.siemens.com/industrial-controls/catalogs

Industry Mall (Online ordering system)
http://www.siemens.com/industrymall

Cax online generator
http://support.automation.siemens.com/WW/CAXorder/default.aspx?lang=en&mlfb=3RA68128AB

Service&Support (Manuals, Certificates, Characteristics, FAQs,...)
https://support.industry.siemens.com/cs/ww/en/ps/3RA68128AB

Image database (product images, 2D dimension drawings, 3D models, device circuit diagrams, EPLAN macros, ...)
http://www.automation.siemens.com/bilddb/cax_de.aspx?mlfb=3RA68128AB&lang=en

Changes preserved
© Copyright Siemens AG

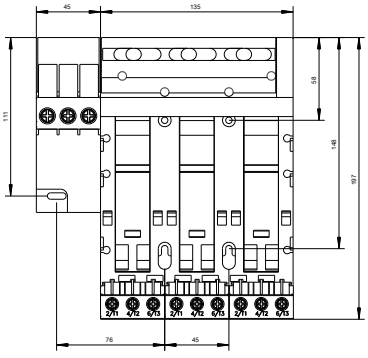

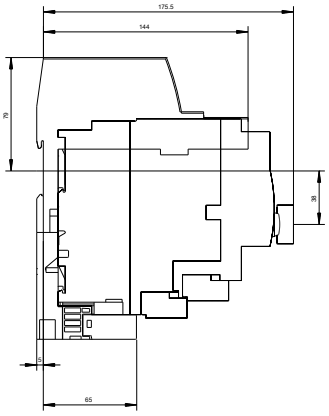

last modified: 27.04.2015

Changes preserved
© Copyright Siemens AG