SIEMENS

Data sheet 3RP19 03

PUSH-IN LUG / ADAPTER FOR SCREW FIXING, FOR DEVICES WITH 1 OR 2 CHANGEOVER CONTACTS



General technical data:

product brand name	SIRIUS

Certificates/ approvals:

General Product Approval				Test Certificates	Shipping Approval
CCC	CSA	EAC	UL	Special Test Certificate	ABS

Shipping Approval			other
GL	LRS	RMRS	Confirmation

Further information

Information- and Downloadcenter (Catalogs, Brochures,...)
http://www.siemens.com/industrial-controls/catalogs

Industry Mall (Online ordering system)
http://www.siemens.com/industrymall

Cax online generator
http://support.automation.siemens.com/WW/CAXorder/default.aspx?lang=en&mlfb=3RP1903

Service&Support (Manuals, Certificates, Characteristics, FAQs,...)
https://support.industry.siemens.com/cs/ww/en/ps/3RP1903

Changes preserved
© Copyright Siemens AG

Image database (product images, 2D dimension drawings, 3D models, device circuit diagrams, EPLAN macros, ...)
http://www.automation.siemens.com/bilddb/cax_de.aspx?mlfb=3RP1903&lang=en

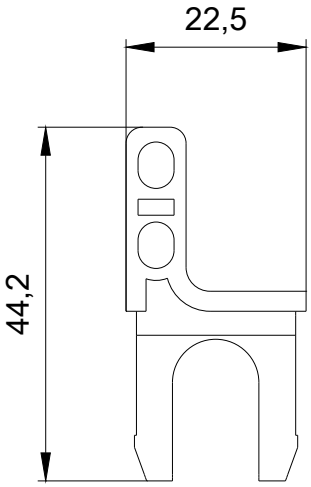

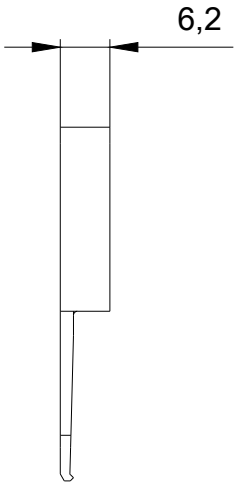

last modified: 27.04.2015

Changes preserved
© Copyright Siemens AG