Catalog Numbers

Catalog No.	Amperage Rating Max	Max Interrupting Rating
1 PHASE, 3 WIRE, 120/240V AC MAX		
WEB1900B	900	65,000
WEB1900BU	900	100,000
WEB11000B	1000	65,000
WEB11000BU	1000	100,000
WEB11200B	1200	65,000
WEB11200BU	1200	100,000

Catalog No.	Amperage Rating Max	Max Interrupting Rating
3 PHASE, 4 WIRE, 240V AC MAX		
WEB3900B	900	65,000
WEB3900BU	900	100,000
WEB31000B	1000	65,000
WEB31000BU	1000	100,000
WEB31200B	1200	65,000
WEB31200BU	1200	100,000

- TYPE 3R OUTDOOR ENCLOSURE
- MAIN BUS RATING: 1200A MAX.
- FOR UNDERGROUND SERVICE ONLY
- COMPLIES WITH EUSERC DWG. NO. 347 / 315

Additional Modules, Accessories, and Lug Kits

FOR USE WITH: Module Description	Siemens Series#	Murray Series#
Main Breakers	(W)MC, WB, WEB	DB_W
Switches	WMP, WMS, WS, WES	DPT_W, DT_W
Tap/Terminal Boxes	WMTB, WTB, WET	DTB_W
Meter Module	WMM, WxMM, WMT, WML, WMK	DG_W, DC_W, DL_W
Extension Box	WMEX, WSP	DS
Bussed Elbow	(W)BE	DL

Connect Modules Using	Catalog Number / Torque
QuickConnect	QC1 (1ph) or QC4 (3ph) 400-440 lb-in (35-36 ft.-lb.)Torque
Single Bolt Joint	SBJ1 (1ph) or SBJ4 (3ph) 400-480 lb-in (35-40 ft.-lb.) Torque

1 Phase: Lugs for Phase and Neutral Connections (not supplied)

NEMA Lug①	MFG	Wire Range	Type	No. Wires per phase	Torque (lb.-in.)
LK13750N2E	Siemens	300-750 kcmil	Mechanical	3	500
LK14500N2E	Siemens	1/0-500 kcmil	Mechanical	2	375 ②
				2	500 ②
2ACL-500	ILSCO	500 kcmil	Compression	4	NA ③
2ACL-750	ILSCO	750 kcmil	Compression	3	NA ③

3 Phase: Lugs for Phase and Neutral Connections (not supplied)

NEMA Lug①	MFG	Wire Range	Type	No. Wires per phase	Torque (lb.-in.)
LK33750N2E	Siemens	300-750 kcmil	Mechanical	3	500
LK34500N2E	Siemens	1/0-500 kcmil	Mechanical	2	375 ②
				2	500 ②
2ACL-500	ILSCO	500 kcmil	Compression	4	NA ③
2ACL-750	ILSCO	750 kcmil	Compression	3	NA ③

① Order one mechanical lug kit for main breaker and neutral conversions. Contact lug manufacturer for compression lug quantities supplied for each kit.
② Kit contains more than one lug type. Reference kit instruction sheet for the actual torque value for each lug type.
③ See lug manufacturer's instruction sheet supplied with the connector for tool, die, and number of crimps.

Schematics

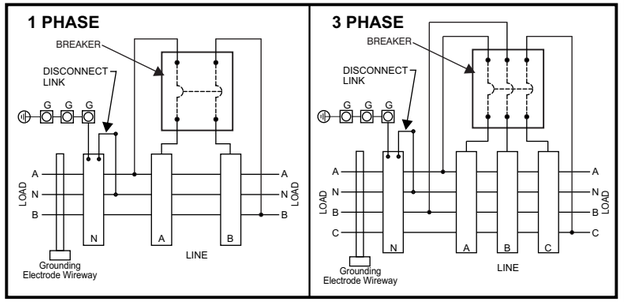

Section View

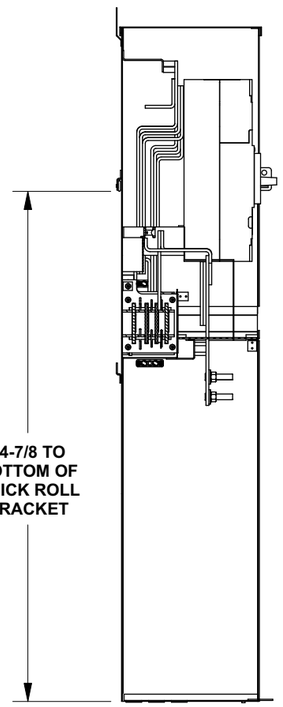

WEB31200B (3 Phase) SHOWN

SOME VIEWS SHOWN WITHOUT COVERS

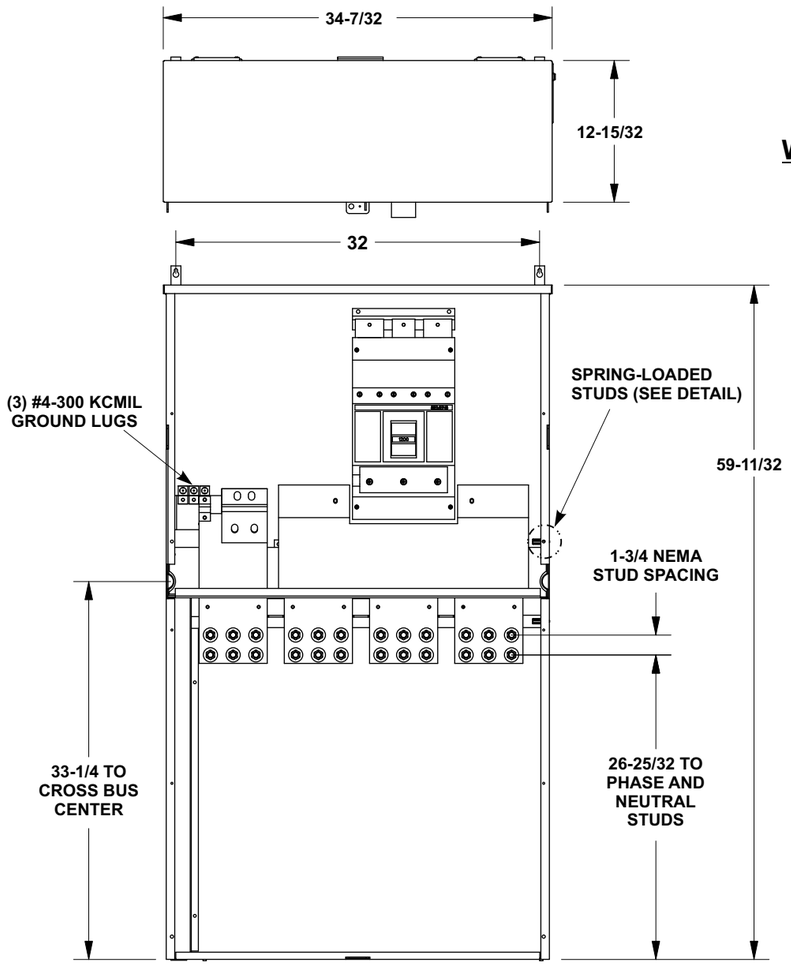

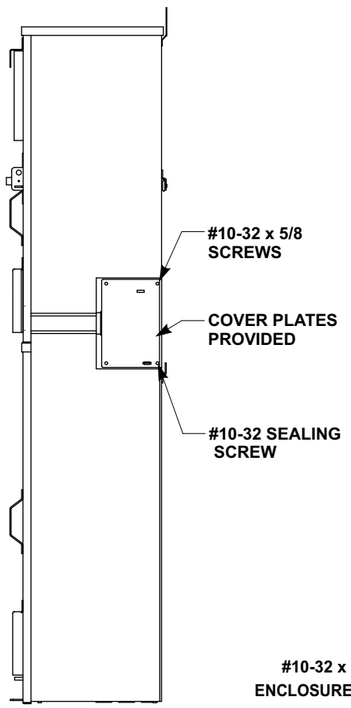

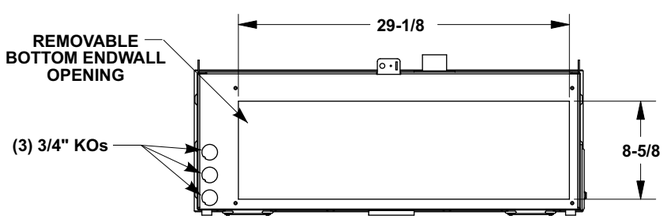

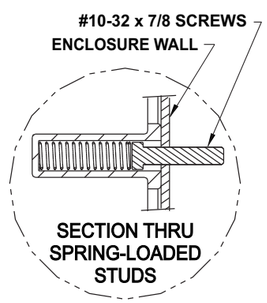

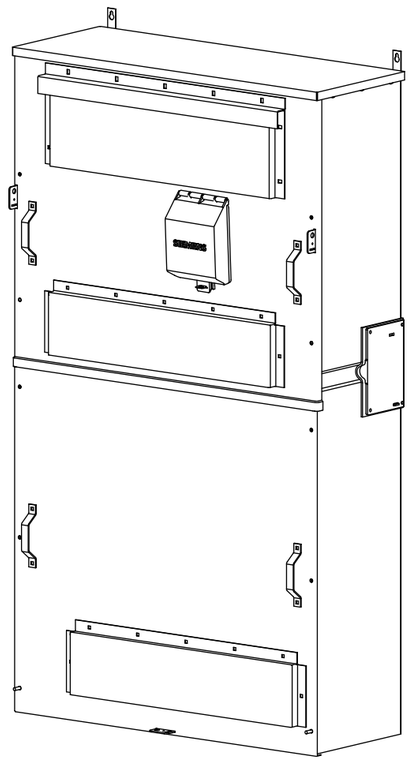

View Shown With Covers

© 2010 Copyright Siemens Industry, Inc.

Siemens Industry, Inc.
Building Technologies Division

PowerMod™ Breaker Mains

Catalog Numbers: **WEB1900B thru WEB31200BU**
(EUSERC) Service Entrance Breaker Mains

Size		Dwg. No.	900-1200A_E_SE_Brkr_Mains
B			
Dwn KAM	Date 1/27/10	DO NOT SCALE DRAWING	SHEET 1 OF 1