Catalog Numbers

Catalog No.	Amperage Rating	Max. Interrupting Rating
1 PHASE, 3 WIRE, 120/240V AC MAX		
WES11200BU	1200	100,000
3 PHASE, 4 WIRE, 240V AC MAX		
WES31200BU	1200	100,000

- FOR UNDERGROUND SERVICE ONLY
- TYPE 3R OUTDOOR ENCLOSURE
- EUSERC COMPLIANT CONSTRUCTION
- COMPLIES WITH EUSERC DWG. No. 315 & 347

Replacement Parts, Accessories, And Additional Modules

FOR USE WITH: Module Description	Siemens Series#	Murray Series#
Main Breakers	(W)MC, WB, WEB	DB_W
Switches	WMP, WMS, WS, WES	DPT_W, DT_W
Tap/Terminal Boxes	WMTB, WTB, WET	DTB_W
Meter Module	WMM, WxMM, WMT, WML, WMK	DG_W, DC_W, DL_W
Extension Box	WMEX, WSP	DS
Bussed Elbow	(W)BE	DL

Connect Modules Using	Catalog Number / Torque
QuickConnect	QC1 (1ph) or QC4 (3ph) 400-440 lb-in (35-36 ft.-lb.)Torque
Single Bolt Joint	SBJ1 (1ph) or SBJ4 (3ph) 400-480 lb-in (35-40 ft.-lb.) Torque

1 Phase: Lugs for Phase and Neutral Connections (not supplied)

NEMA Lug①	MFG	Wire Range	Type	No. Wires per phase	Torque (lb.-in.)
LK13750N2E	Siemens	300-750 kcmil	Mechanical	3	500
LK14500N2E	Siemens	1/0-500 kcmil	Mechanical	2	375②
				2	500②
2ACL-500	ILSCO	500 kcmil	Compression	4	NA ③
2ACL-750	ILSCO	750 kcmil	Compression	3	NA ③

3 Phase: Lugs for Phase and Neutral Connections (not supplied)

NEMA Lug①	MFG	Wire Range	Type	No. Wires per phase	Torque (lb.-in.)
LK33750N2E	Siemens	300-750 kcmil	Mechanical	3	500
LK34500N2E	Siemens	1/0-500 kcmil	Mechanical	2	375②
				2	500②
2ACL-500	ILSCO	500 kcmil	Compression	4	NA ③
2ACL-750	ILSCO	750 kcmil	Compression	3	NA ③

Siemens Accessories	Catalog Number
Replacement Switch	NXD63S120A (for single phase devices use outside poles only)

① Order one mechanical lug kit for main breaker and neutral conversions. Contact lug manufacturer for compression lug quantities supplied for each kit.
② Kit contains more than one lug type. Reference kit instruction sheet for the actual torque value for each lug type.
③ See lug manufacturer's instruction sheet supplied with the connector for tool, die, and number of crimps.

Schematics

WES11200BU

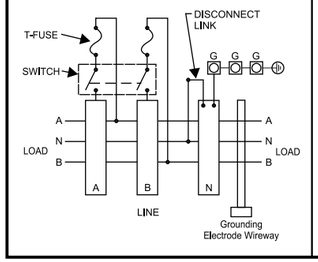

WES31200BU

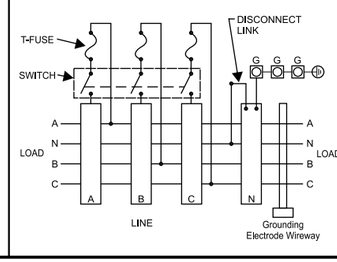

Order Catalog Numbers below for units with Lug Kits factory installed.

CATALOG Number	BASE Number	with Lug Kit Factory Installed
WES11200BUA9	WES11200BU	LK14500N2E
WES11200BUA12	WES11200BU	LK15600N2
WES11200BUA18	WES11200BU	LK13750N2E
WES31200BUB9	WES31200BU	LK34500N2E
WES31200BUB12	WES31200BU	LK35600N2
WES31200BUB18	WES31200BU	LK33750N2E

WES31200BU (3 Phase) SHOWN
VIEWS SHOWN WITHOUT COVER

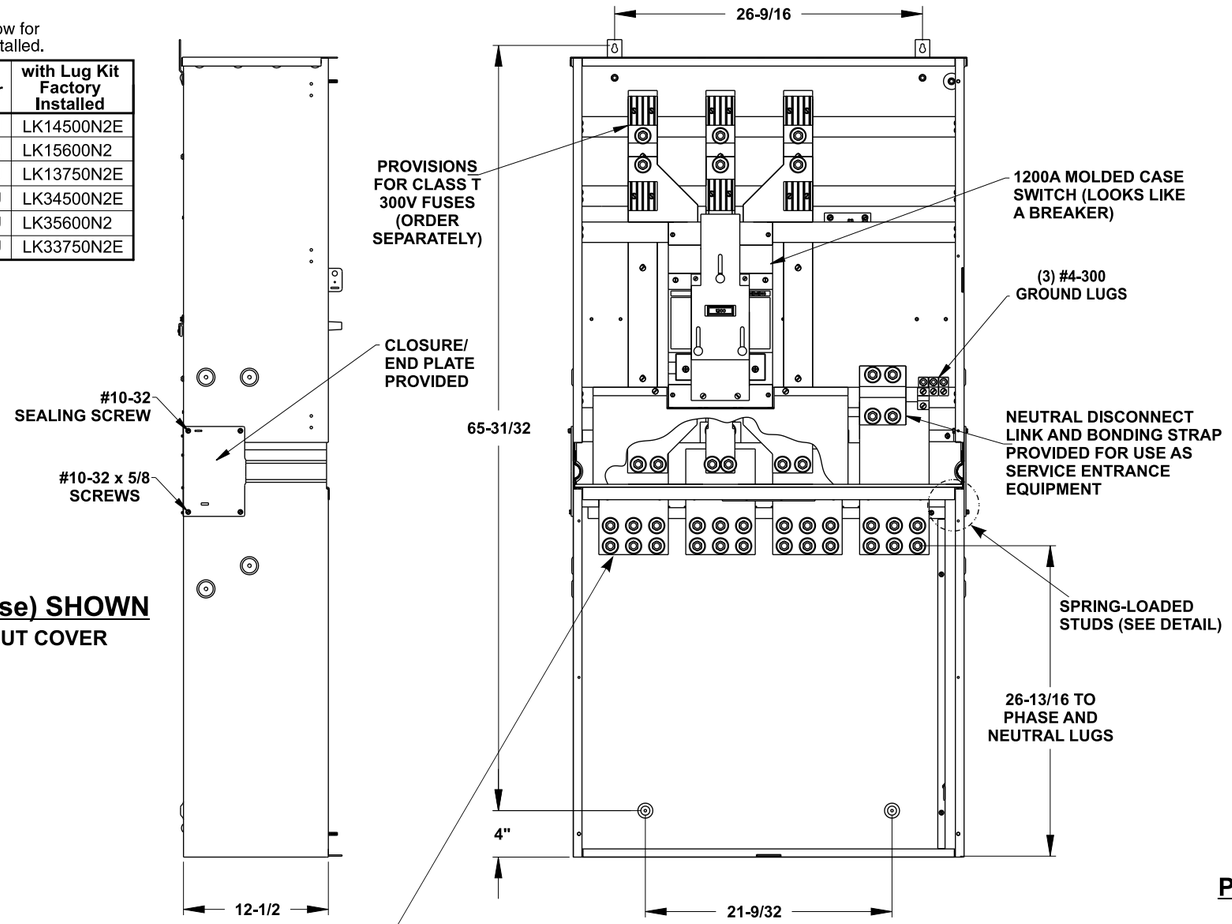

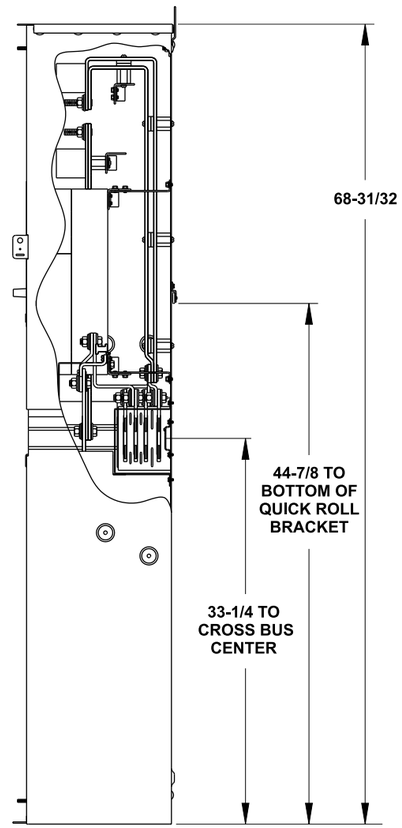

PARTIAL SECTION

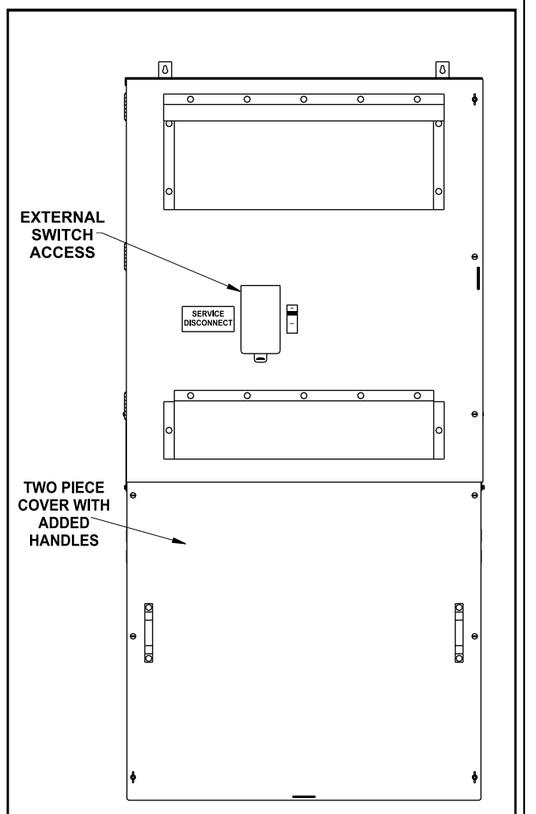

VIEW SHOWN WITH COVERS

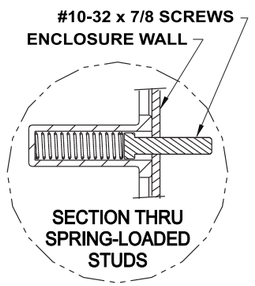

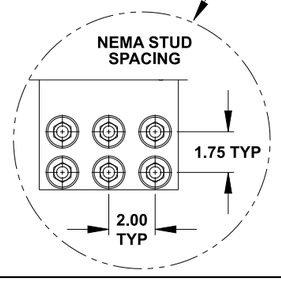

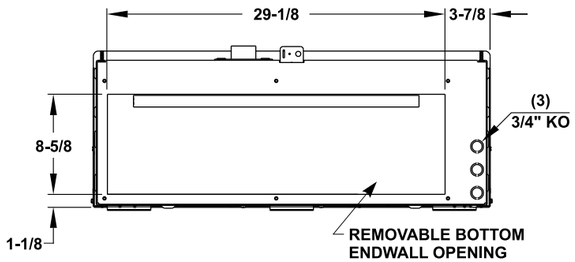

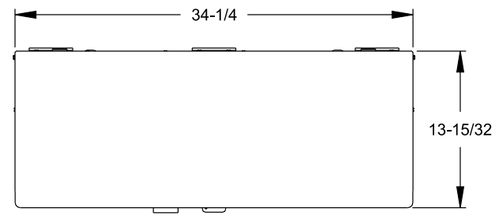

TOP VIEW

© 2015 Copyright Siemens Industry, Inc.

SIEMENS
Siemens Industry, Inc.

PowerMod™ Switch Mains

Description: **WES11200BU and WES31200BU EUSERC Service Entrance Switch Mains**

KAM 8/11/15	Fam .	DO NOT SCALE DRAWING	Dwg. No. 1200A_E_SE_Switch_Mains