Catalog Numbers

Catalog No.	Amperage Rating	Max. Interrupting Rating
1 PHASE, 3 WIRE, 120/240V AC MAX		
WES1600BU	600	100,000
3 PHASE, 4 WIRE, 240V AC MAX		
WES3600BU	600	100,000

- FOR UNDERGROUND SERVICE ONLY
- TYPE 3R OUTDOOR ENCLOSURE
- USE CLASS T (300V) FUSES ONLY
- COMPLIES WITH EUSERC DWG. NOs. 315, 343, and 347

Order Catalog Numbers below for units with Lug Kits factory installed.

CATALOG No.	BASE Number	with Lug Kit Factory Installed
WES1600BUA4	WES1600BU	LK12500N2E
WES1600BUA15	WES1600BU	LK12750N2
WES3600BUB4	WES3600BU	LK32500N2E
WES3600BUB15	WES3600BU	LK32750N2

Schematics

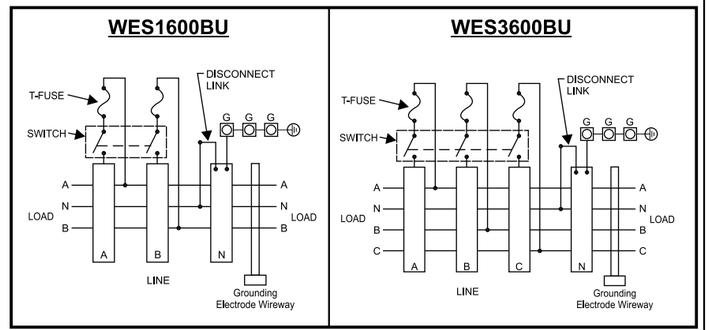

WES3600BU (3 Phase) SHOWN
VIEWS SHOWN WITHOUT COVER

FRONT VIEW SHOWN WITH COVERS

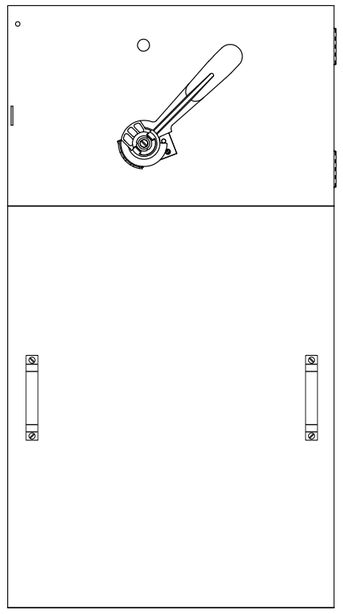

SECTION VIEW

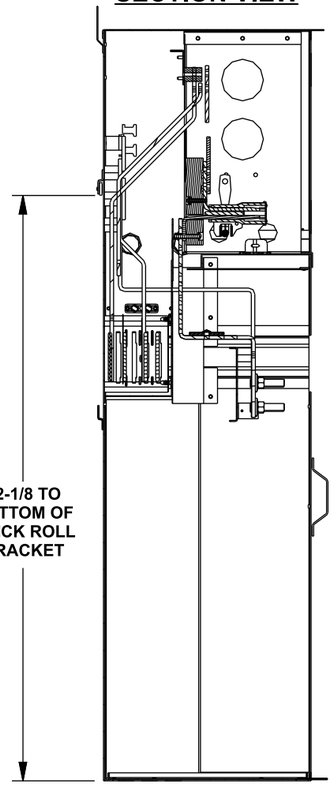

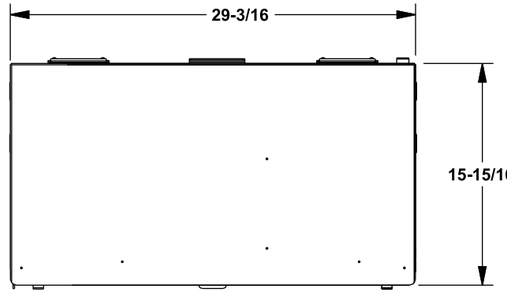

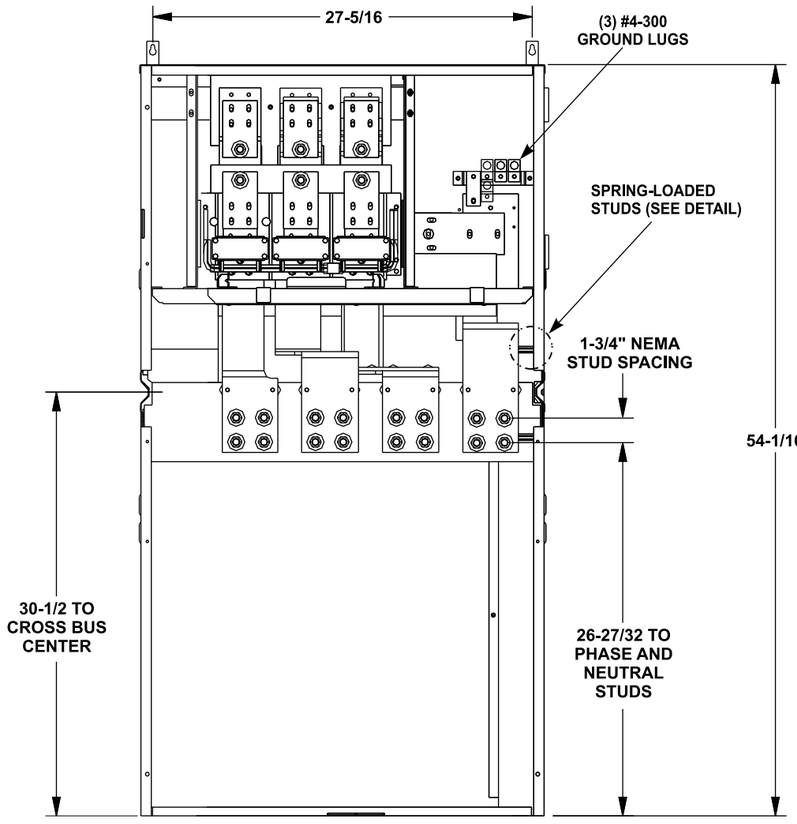

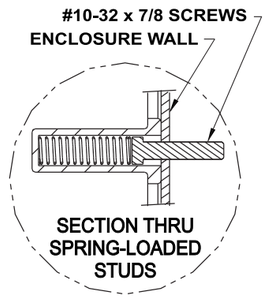

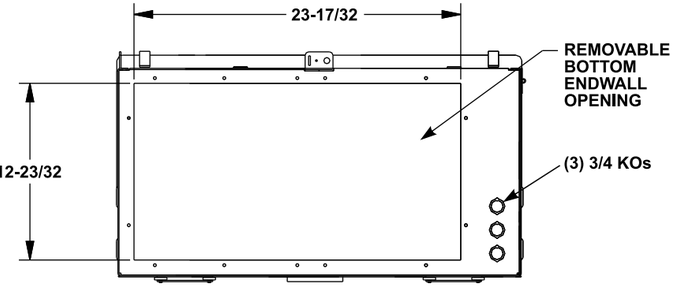

Replacement Parts, Accessories, and Additional Modules

IMPORTANT - for use with:

Module Description	Siemens Series#
Main Breakers	WB(M), WEB(M), WXB, BFT
Switches	WMP, WS, WES, WXS
Tap/Terminal Boxes	WTB, WET, WT_PU, WTBN, WBT
Pull Boxes	WMMB
Meter Module	(W)MM, (W)MT, (W)ML, (W)MK, (W)MLZ(F), (W)MN
Meter Combinations	WC, WCL, WCT,
Extension Box	WSP, WSPD
Bussed Elbow	BE, WELB

Connect Modules Using Quick Connect

Cat. No.	Torque
QC1 (1ph)	400-440 lb-in (35-36 ft.-lb.)
QC4 (3ph)	400-440 lb-in (35-36 ft.-lb.)

1 Phase: Lugs for Phase and Neutral Connections (not supplied)					
NEMA Lug①	MFG	Wire Range	Type	No. Wires per phase	Torque (lb.-in.)
LK14500N2	Siemens	1/0-500 kcmil	Mechanical	4	500
LK13750N2	Siemens	300-750 kcmil	Mechanical	3	500 ②
LK12750N2	Siemens	300-750 kcmil	Mechanical	2	500
LK12500N2E	Siemens	#2-500 kcmil	Mechanical	2	500
2ACL-500	ILSCO	500 kcmil	Compression	2	NA ③
2ACL-750	ILSCO	750 kcmil	Compression	2	NA ③
3 Phase: Lugs for Phase and Neutral Connections (not supplied)					
NEMA Lug①	MFG	Wire Range	Type	No. Wires per phase	Torque (lb.-in.)
LK34500N2	Siemens	1/0-500 kcmil	Mechanical	4	500
LK33750N2	Siemens	300-750 kcmil	Mechanical	3	500 ②
LK32750N2	Siemens	300-750 kcmil	Mechanical	2	500
LK32500N2E	Siemens	#2-500 kcmil	Mechanical	2	500
2ACL-500	ILSCO	500 kcmil	Compression	2	NA ③
2ACL-750	ILSCO	750 kcmil	Compression	2	NA ③

① Order one mechanical lug kit for main breaker and neutral conversions. Contact lug manufacturer for compression lug quantities supplied for each kit.
② Kit contains more than one lug type.
③ See lug manufacturer's instruction sheet supplied with the connector for tool, die, and number of crimps.

© 2018 Copyright Siemens Industry, Inc.

SIEMENS
Siemens Industry, Inc.

PowerMod™ Switch Mains

Description: **WES1600BU thru WES3600BU EUSERC Service Entrance Switch Mains**

KAM 4/25/18	DO NOT SCALE DRAWING	Dwg. No. **600A_E_SE_Switch_Mains**