Catalog Number:	U3990-XL-200
Item Description:	200A 4T RL OU MAIN
UPC Code:	784572139336

Brand Name:	Milbank
Type:	Ringless Meter Socket
Application:	Meter Socket With Main
Standard:	UL Listed
Voltage Rating:	Up to 240 Volts Alternating Current
Amperage Rating:	200 Continuous Ampere
Phase:	1 Phase
Frequency Rating:	60 Hertz
Number Of Cutouts:	1
Cutout Size:	200 Ampere Main Breaker
Cable Entry:	Overhead and Underground
Terminal:	Lay in Line Side and Single Mechanical Load Side
Mounting:	Surface Mount
Enclosure:	Type 3R, G90 Galvanized Steel with Powder Coat Finish

Additional Specifications:	Number of Jaws:4 Terminal
	Hub Opening and Closing Plates:Small Closing Plate
	Hub Opening and Closing Plates:Small Closing Plate
	Hub Opening and Closing Plates:Small Closing Plate
	Hub Opening and Closing Plates:Small Closing Plate
	Hub Opening and Closing Plates:Small Closing Plate

Utility requirements may vary. Always consult the serving utility for their requirements prior to ordering or installing this equipment. This product must always be installed by a licensed electrician. Installation of this equipment may require local electrical inspector approval.

FEATURE TABLE		
ITEM	QTY	DESCRIPTION
A	8	U/L MNTG.EMBOSS
B	1	¼ SOLID K.O.
C	1	¼, ½ CONC. K.O.
D	4	1¼, 1½, 2, 2½ CONC. K.O.
E	3	1¼, 1½, 2, 2½, 3 CONC. K.O.

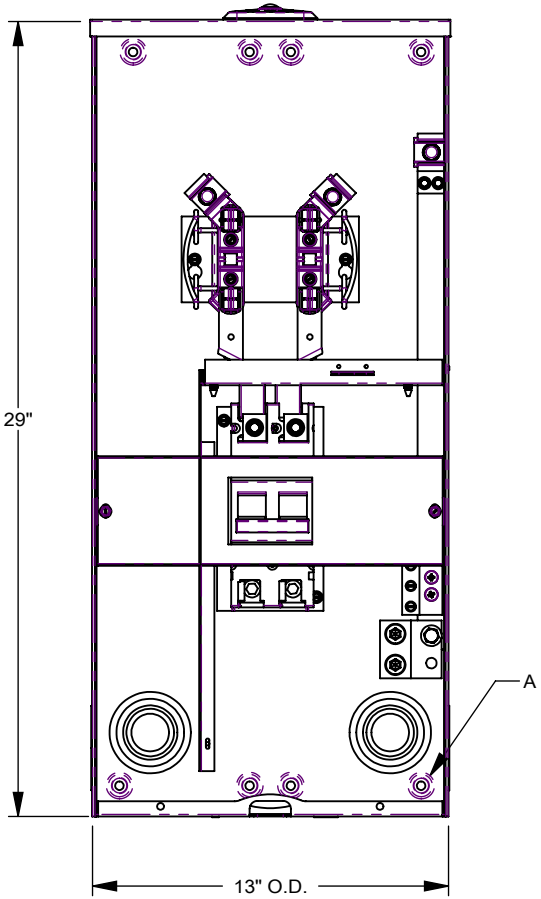

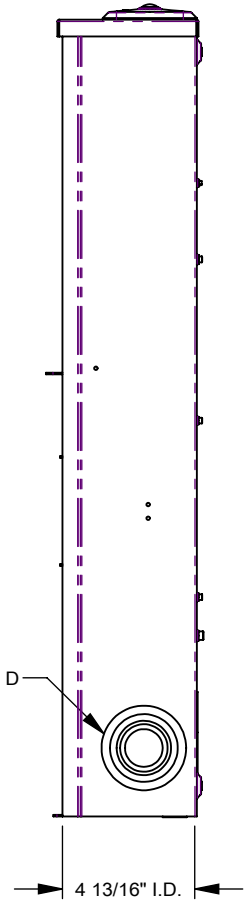

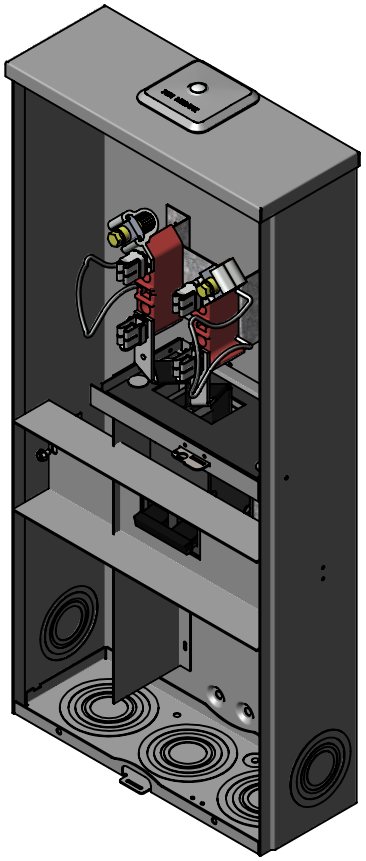

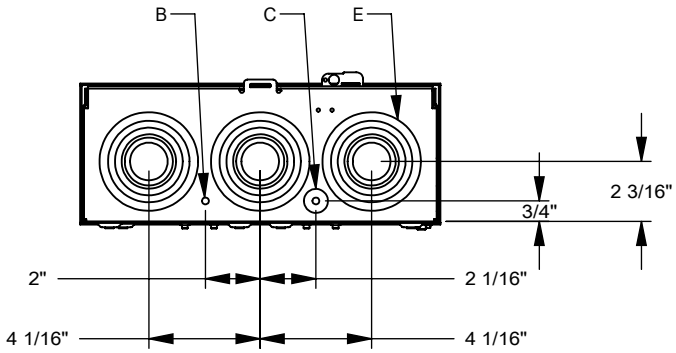

MILBANK®
ENERGY AT WORK

Version:

1

All dimensions are +/- 1/16”.
Drawing views are not to scale.

Utility requirements for this equipment may vary. Always consult the serving utility for their requirements prior to ordering or installing this equipment. This product must be installed by a licensed electrician. Installation of this equipment may require local electrical inspector approval.