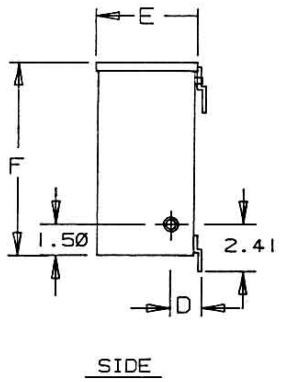

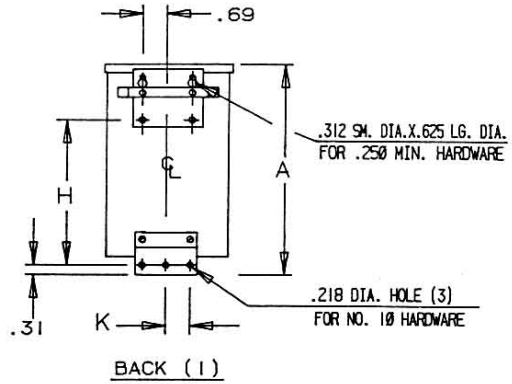

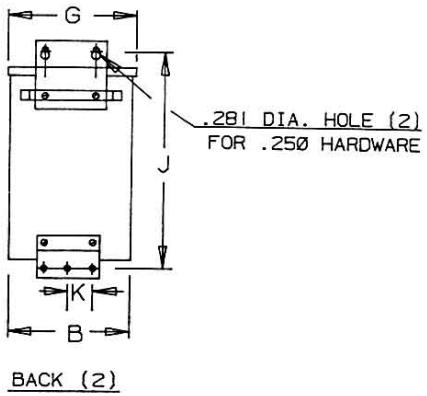

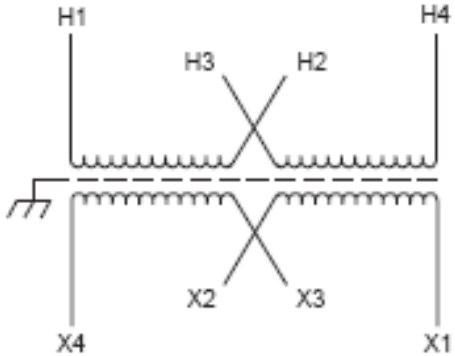

Primary Volts	Connect Primary Lines To	Inter-Connect	Connect Secondary Lines To
480	H1-H4	H2 to H3	
240	H1-H3 & H2-H4		
Secondary Volts			
240		X2 to X3	X1-X4
120/240		X2 to X3	X1-X2-X4
120		X1 to X3 X2 to X4	X1-X4

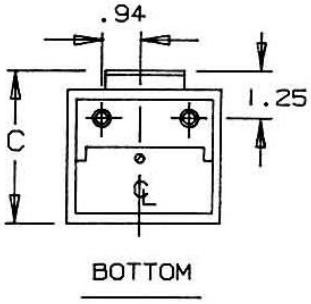

KVA	CATALOG NUMBER	VOLTAGE		WIRING DIAGRAM	WEIGHT	PHASE	FREQ.
		HIGH	LOW				
2.0	**T-2-53012-S**	240 x 480	120/240		38 Lbs	1	50/60 Hz

TYPICAL PERFORMANCE DATA

Winding Rise	115°C
Insulation	180°C
Sound Level	45 dB

Regulation @ 100% PF	

IMPEDANCE	

Typical Efficiency	
Full Load Losses	
No Load Losses	

A	B	C	D	E	F	G	H	J	K
12.52	5.40	5.13	1.67	4.92	11.68	5.50	9.03	13.00	1.50

Revisions

ACME ELECTRIC

Type No.

					A	PRINTS TO	CONTROL 7