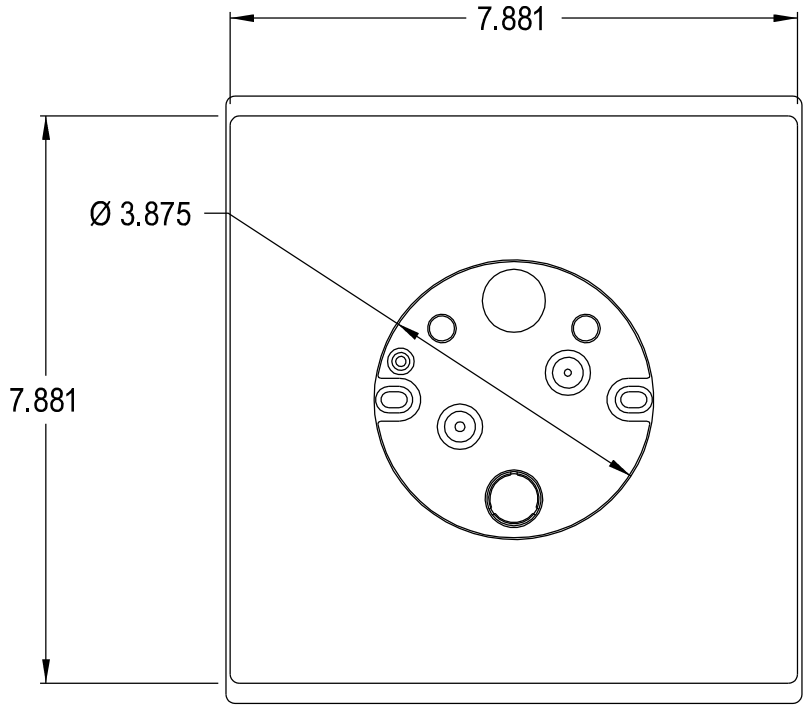
7.881
Ø 3.875
7.881

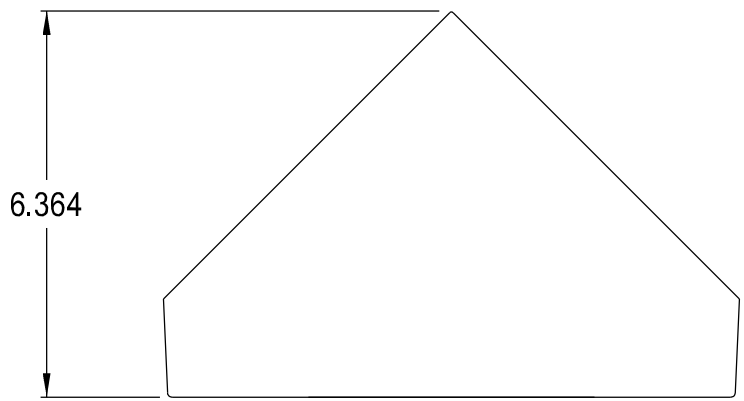
6.364