PART NUMBER	SIZE	"R"	"O"	"H"	"S" MIN	"B" MIN	"L"
5121065	1"	48"	48"	48"	1 7/8"	N/A	75 3/8"
5121076	1 1/2"	48"	48"	48"	2"	N/A	75 3/8"
5121075	2"	48"	48"	48"	2"	N/A	75 3/8"
5121030	2 1/2"	48"	48"	48"	3"	N/A	75 3/8"
5121082	3"	48"	48"	48"	3 1/8"	N/A	75 3/8"
5121024	4"	48"	48"	48"	3 3/8"	N/A	75 3/8"
5121025	5"	48"	48"	48"	3 5/8"	N/A	75 3/8"
5121026	6"	48"	48"	48"	3 3/4"	N/A	75 3/8"

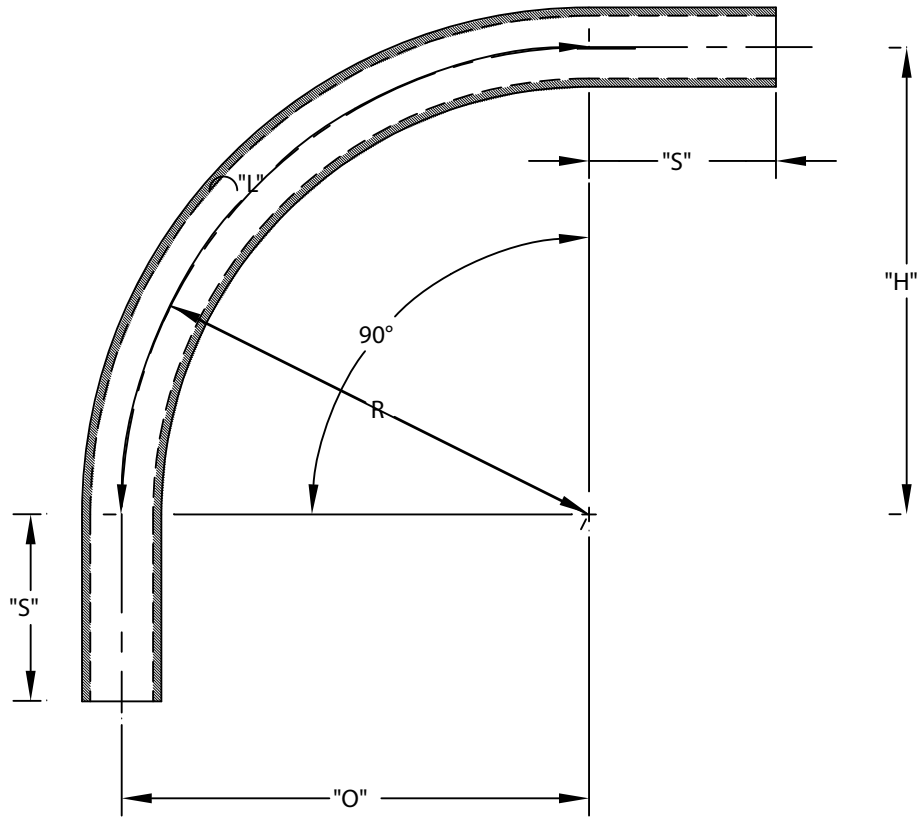

ETL LISTED
CONFORMS TO UL651
ETL CONTROL #3107144
CONFORMS TO NEMA TC3
SEE NEC ARTICLE 352 FOR USE
MATERIAL IS RIGID PVC
BEND TOLERANCE IS ±2°

Intertek

CANTEX INC.
Fort Worth, TEXAS

90° Elbows Plain End
Schedule 80 48" Radius Elbows

Drawn By: CD Branch	Date: 10/15/07	Ref.