TECHNICAL DATA SHEET

ABB cable glands – TCF series

Tray – cord fitting

TCF Tray cable fitting is designed for use with Non-Armoured/portable cables in Class I Zone 1 and tray cable in Class I Zone 2/Div 2.

Certifications / Standards:

C US

Features & Benefits:
- High mechanical pull out
- Large cable clamping range
- Full length bushing seal, protects cable

Applications:
- Hazardous and industrial locations
- Raceway and enclosures
- Suitable for cable types:
  - Non-armoured, (Class 1 Zone 1)
  - Portable, (Class 1 Zone 1)
  - Tray, (Class 1 Zone 2)

Material:
- Copper free aluminium (stainless steel 316 options)
- Neoprene/Santoprene sealing bush
- Nylon grip

Environmental ratings:

Working Temperature:
- Normal use: -40°C to +90°C

Ingress protection:
- IP66
- Type 4/4X
- Type 6 (flexible cord only)

Chemical resistance guide:
- See publication TDS000081

Conforms to:
- CSA C22.2 60079-0, 60079-7
  - Ex e II, IP66; Type 4/4X, 6
- UL 60079-0, 60079-7
  - Class I, Zone 1, AEx e II, IP66; Type 4/4X, 6
- UL514B, UL50 / CSA C22.2-18.3, -94
  - Wet and Dry Locations
- RoHS (Restriction of Hazardous Substances Directive) 2011/65/EU Incorporating 2015/863 amendment to Annex II

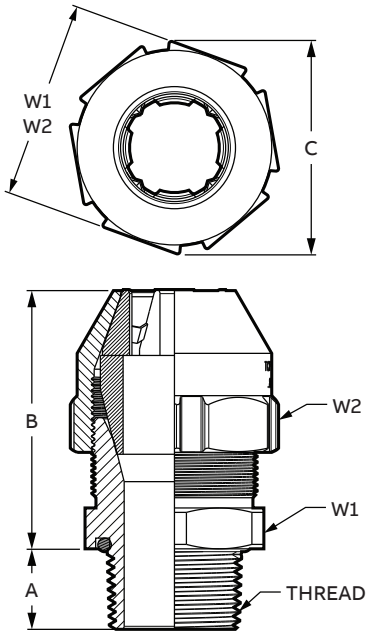

Product selection

Part no:	Thread (NPT)	Cable range				Nominal dimensions		
		Min	Max	A	B	C	W1	W2
TCF050-27AL	1/2	**3.81**	**6.86**	**15.75**	**48.08**	**31.84**	**28.58**	**29.64**
		(0.150)	(0.270)	(0.620)	(1.893)	(1.253)	(1.125)	(1.167)
TCF050-40AL	1/2	**6.35**	**10.16**	**15.75**	**59.18**	**31.84**	**28.58**	**29.64**
		(0.250)	(0.400)	(0.620)	(2.330)	(1.253)	(1.125)	(1.167)
TCF050-54AL	1/2	**10.16**	**13.72**	**15.75**	**59.18**	**31.84**	**28.58**	**29.64**
		(0.400)	(0.540)	(0.620)	(2.330)	(1.253)	(1.125)	(1.167)
TCF050-67AL	1/2	**13.72**	**17.02**	**15.75**	**62.43**	**41.60**	**34.93**	**38.74**
		(0.540)	(0.670)	(0.620)	(2.458)	(1.638)	(1.375)	(1.525)
TCF050-78AL	1/2	**16.76**	**19.81**	**15.75**	**62.43**	**41.60**	**34.93**	**38.74**
		(0.660)	(0.780)	(0.620)	(2.458)	(1.638)	(1.375)	(1.525)
TCF075-40AL	3/4	**6.35**	**10.16**	**16.00**	**59.18**	**31.84**	**34.93**	**29.64**
		(0.250)	(0.400)	(0.630)	(2.330)	(1.253)	(1.375)	(1.167)
TCF075-54AL	3/4	**10.16**	**13.72**	**16.00**	**59.18**	**31.84**	**34.93**	**29.64**
		(0.400)	(0.540)	(0.630)	(2.330)	(1.253)	(1.375)	(1.167)
TCF075-67AL	3/4	**13.72**	**17.02**	**16.00**	**62.43**	**41.60**	**34.93**	**38.74**
		(0.540)	(0.670)	(0.630)	(2.458)	(1.638)	(1.375)	(1.525)
TCF075-78AL	3/4	**16.76**	**19.81**	**16.00**	**62.43**	**41.60**	**34.93**	**38.74**
		(0.660)	(0.780)	(0.630)	(2.458)	(1.638)	(1.375)	(1.525)
TCF075-88AL	3/4	**19.56**	**22.35**	**15.75**	**68.71**	**52.84**	**44.45**	**49.20**
		(0.770)	(0.880)	(0.620)	(2.705)	(2.080)	(1.750)	(1.937)
TCF100-78AL	1	**16.76**	**19.81**	**19.94**	**69.98**	**52.84**	**44.45**	**49.20**
		(0.660)	(0.780)	(0.785)	(2.755)	(2.080)	(1.750)	(1.937)
TCF100-88AL	1	**19.56**	**22.35**	**19.94**	**69.98**	**52.84**	**44.45**	**49.20**
		(0.770)	(0.880)	(0.785)	(2.755)	(2.080)	(1.750)	(1.937)
TCF100-100AL	1	**22.10**	**25.40**	**19.94**	**69.98**	**52.84**	**44.45**	**49.20**
		(0.870)	(1.000)	(0.785)	(2.755)	(2.080)	(1.750)	(1.937)
TCF100-109AL	1	**23.88**	**27.69**	**19.94**	**69.72**	**52.84**	**44.45**	**49.20**
		(0.940)	(1.090)	(0.785)	(2.745)	(2.080)	(1.750)	(1.937)
TCF125-109AL	1-1/4	**22.61**	**27.69**	**20.57**	**98.15**	**68.12**	**61.72**	**63.42**
		(0.890)	(1.090)	(0.810)	(3.864)	(2.682)	(2.430)	(2.497)
TCF125-128AL	1-1/4	**27.43**	**32.51**	**20.57**	**98.15**	**68.12**	**61.72**	**63.42**
		(1.080)	(1.280)	(0.810)	(3.864)	(2.682)	(2.430)	(2.497)
TCF125-147AL	1-1/4	**32.26**	**37.34**	**20.57**	**98.15**	**68.12**	**61.72**	**63.42**
		(1.270)	(1.470)	(0.810)	(3.864)	(2.682)	(2.430)	(2.497)
TCF150-115AL	1-1/2	**22.61**	**29.21**	**20.96**	**96.42**	**78.62**	**66.47**	**73.20**
		(0.890)	(1.150)	(0.825)	(3.796)	(3.095)	(2.617)	(2.882)
TCF150-140AL	1-1/2	**28.96**	**35.56**	**20.96**	**96.42**	**78.62**	**66.47**	**73.20**
		(1.140)	(1.400)	(0.825)	(3.796)	(3.095)	(2.617)	(2.882)
TCF150-165AL	1-1/2	**35.31**	**41.91**	**20.96**	**96.42**	**78.62**	**66.47**	**73.20**
		(1.390)	(1.650)	(0.825)	(3.796)	(3.095)	(2.617)	(2.882)

Available in Stainless steel 316 up to TCF100-109SS6 , replace “AL” by “SS6” in the catalog number
Bold numbers are metric, parenthesis numbers are inches.
Note: Product must be installed in accordance with applicable national and local electrical codes.

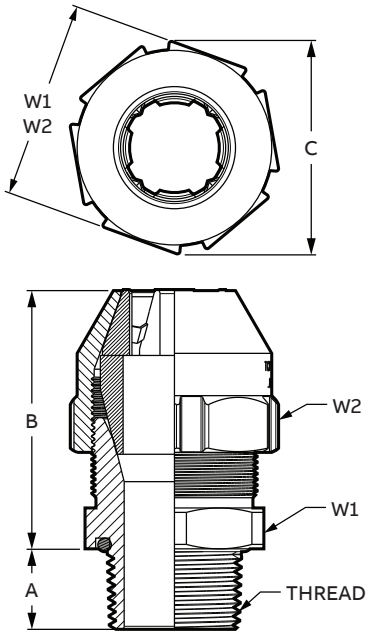

Product selection

Part no:	Thread (NPT)	Cable range		Nominal dimensions				
		Min	Max	A	B	C	W1	W2
TCF200-153AL	2	**30.23**	**38.86**	**21.84**	**106.88**	**92.59**	**82.42**	**86.21**
		(1.190)	(1.530)	(0.860)	(4.208)	(3.645)	(3.245)	(3.394)
TCF200-186AL	2	**38.61**	**47.24**	**21.84**	**106.88**	**92.59**	**82.42**	**86.21**
		(1.520)	(1.860)	(0.860)	(4.208)	(3.645)	(3.245)	(3.394)
TCF200-219AL	2	**46.99**	**55.63**	**21.84**	**106.88**	**92.59**	**82.42**	**86.21**
		(1.850)	(2.190)	(0.860)	(4.208)	(3.645)	(3.245)	(3.394)
TCF250-252AL	2-1/2	**53.85**	**64.01**	**32.51**	**141.73**	**113.67**	**99.77**	**105.31**
		(2.120)	(2.520)	(1.280)	(5.580)	(4.475)	(3.928)	(4.146)
TCF300-278AL	3	**60.45**	**70.61**	**33.76**	**142.27**	**122.81**	**111.20**	**114.10**
		(2.380)	(2.780)	(1.329)	(5.601)	(4.835)	(4.378)	(4.492)
TCF300-304AL	3	**67.06**	**77.22**	**34.04**	**146.30**	**130.58**	**119.46**	**121.69**
		(2.640)	(3.040)	(1.340)	(5.760)	(5.141)	(4.703)	(4.791)
TCF300-330AL	3	**73.66**	**83.82**	**34.04**	**147.83**	**137.67**	**118.11**	**128.17**
		(2.900)	(3.300)	(1.340)	(5.820)	(5.420)	(4.650)	(5.046)

Available in Stainless steel 316 up to TCF100-109SS6 , replace “AL” by “SS6” in the catalog number
Bold numbers are metric, parenthesis numbers are inches.
Note: Product must be installed in accordance with applicable national and local electrical codes.

ABB Ltd.
Electrification products
Memphis, Tennessee
USA

We reserve the right to make technical changes or modify the contents of this document without prior notice. With regard to purchase orders, the agreed particulars shall prevail. ABB AG does not accept any responsibility whatsoever for potential errors or possible lack of information in this document.

We reserve all rights in this document and in the subject matter and illustrations contained therein. Any reproduction, disclosure to third parties or utilization of its contents – in whole or in parts – is forbidden without prior written consent of ABB AG.
Copyright© 2017 ABB
All rights reserved