TECHNICAL DRAWINGS

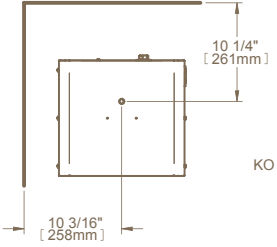

TOP

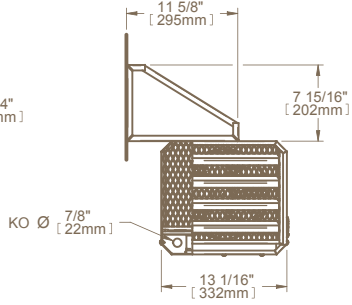

FRONT

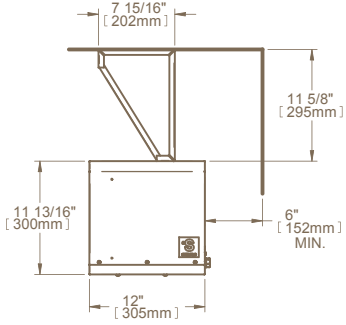

SIDE

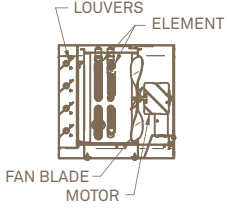

INSIDE VIEW