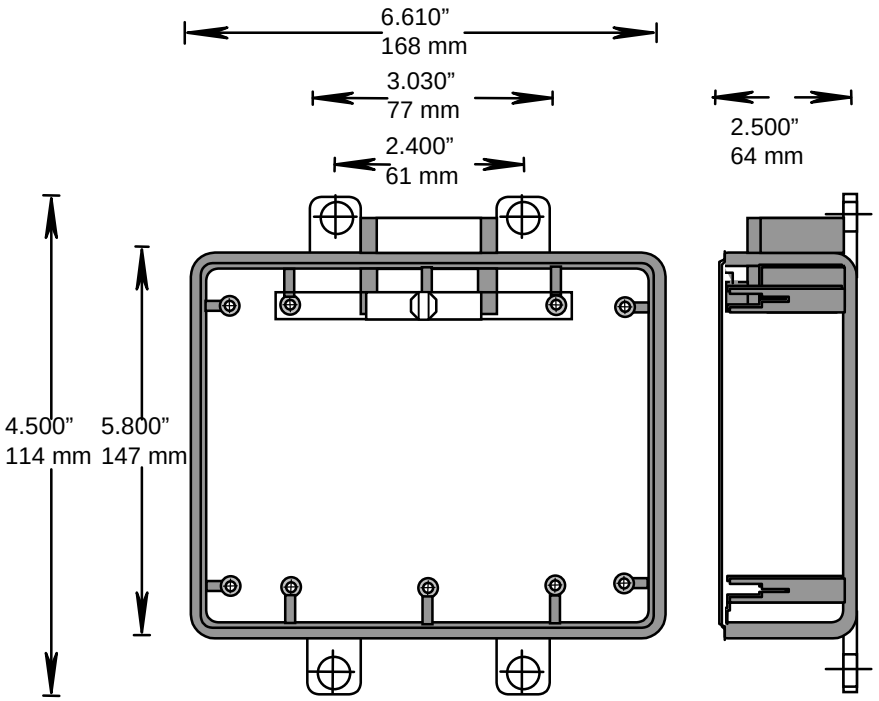

Wall thickness for all boxes=0.188 in. (or 4.8mm)

COMPONENTS

DESCRIPTION	PART NUMBER	SIZE	QUANTITY
REGULAR INSERT	072537	6-32	7
COLLAR INSERT	072536	6-32	3
SCREW, HEXHEAD COMB	072511	10-32 X 5/16	1
REDUCER BUSHINGS	097554	¾ X ½	1
REDUCER BUSHINGS	097979	1X ¾	1
TRIPLE GANG GROUND CLIP	172258	3	1

Filename:	KRALOY-69.doc
Directory:	\\Bersrvbdc\bergen\QC MANUAL
Template:	C:\Documents and Settings\joelau\Application Data\Microsoft\Templates\Normal.dot
Title:	SOCKET DIMENSION
Subject:	
Author:	joe lau
Keywords:	
Comments:	
Creation Date:	8/22/2002 11:59 AM
Change Number:	6
Last Saved On:	10/21/2004 4:20 PM
Last Saved By:	Joe Lau
Total Editing Time:	0 Minutes
Last Printed On:	8/8/2005 12:26 PM
As of Last Complete Printing	
Number of Pages:	1
Number of Words:	51 (approx.)
Number of Characters:	294 (approx.)