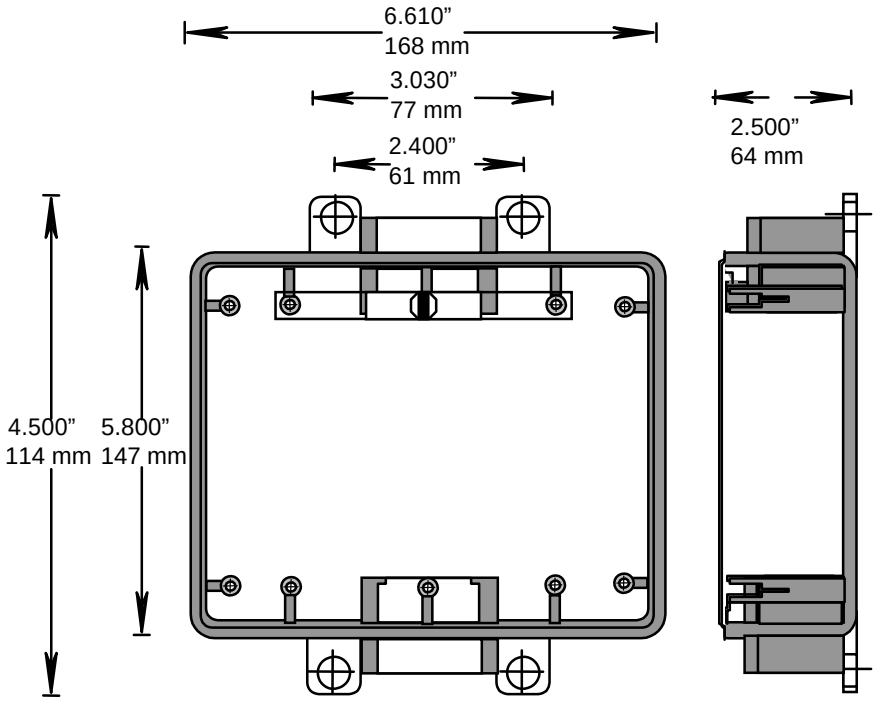

Wall thickness for all boxes=0.188 in. (or 4.8mm)

COMPONENTS

DESCRIPTION	PART NUMBER	SIZE	QUANTITY
REGULAR INSERT	072537	6-32	7
COLLAR INSERT	072536	6-32	3
SCREW, HEXHEAD COMB	072511	10-32 X 5/16	1
REDUCER BUSHINGS	097554	¾ X ½	2
REDUCER BUSHINGS	097979	1X ¾	2
TRIPLE GANG GROUND CLIP	172258	3	1