Product Datasheet

CHANCE

C15M36 -- BRACKET, TRANSFORMER, BANDED CLUSTER, ALUMINUM

Aluminum Banded Transformer Cluster, for mounting three 3 through 100 kVa transformers. For transformers of 167 through 250 kVa with four position NEMA C lugs order adapter plate C321-A. Refer to chart for loading information.

Product Specifications

Product Categories	Equipment Mounting Brackets
Product Group	Bracket, Transformer, Aluminum
Product Type	Banded
Size	Standard, 7 3/4" to 12 1/4" Pole
Diameter	Standard, 7 3/4" to 12 1/4" Pole
Transformer Lug Configuration	NEMA B, 24" Vertical Spacing
Distance from Pole	6"
Material	6061-T6 Aluminum
Details	3 to 100 kVA
RUS Listed	dm - Bracket, transformer
Return Type	Standard
UPC Code	096359242253
Standard Package	1
Unit of Measure	EA
Min Order Qty	1
Pallet Quantity	6
Weight / Ea.	39.2 lbs
Webpage	Click **HERE** to view webpage
Drawing	Click **HERE** to view drawing.

Compressed Product Number

C15M36

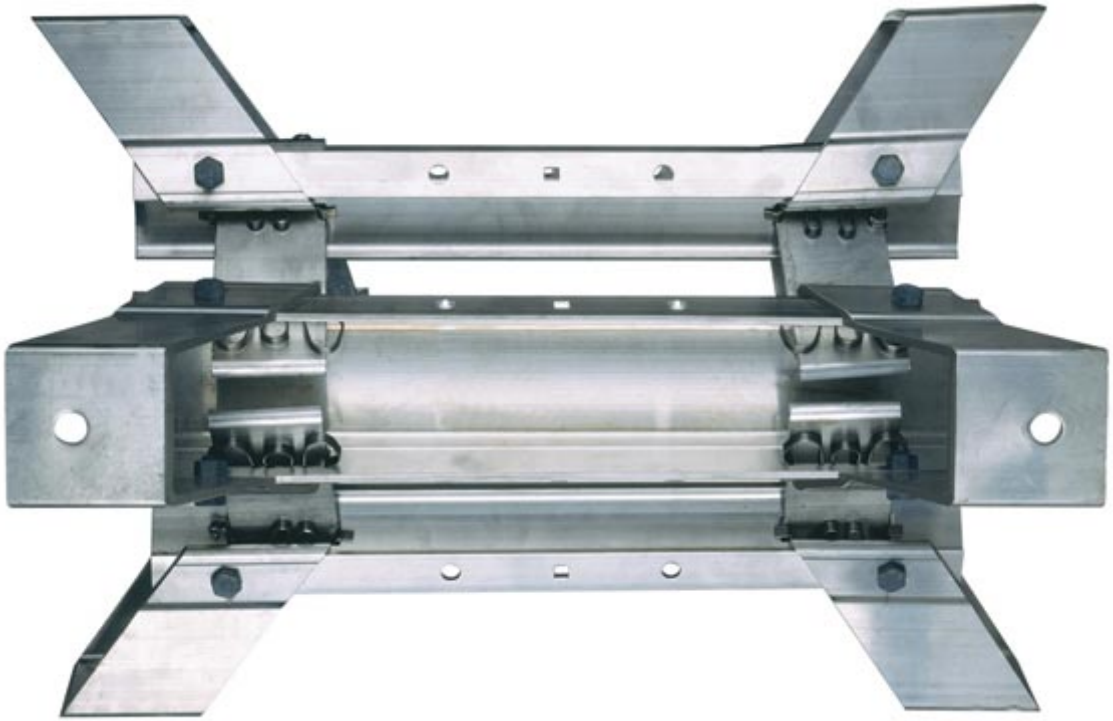

Loading Information

Cluster mounts are subjected to eccentric loading in service because transformer mounting brackets are located away from the lines of action of their gravity loads. Although the distance between the mounting face and the gravity load (the moment arm of the load) is often taken at 14", in reality it varies among the different models of transformer. By changing the bending moment associated with the vertical load, this variation may greatly affect the ability of the cluster mount to support the various transformers. Because the resisting stresses produced in the cluster mount are related to both the vertical load itself and to its associated moment, a single formula based on the moment arm will not satisfactorily predict safe loading. It is recommended that the moment arms be taken into account along with the weights of any transformers to be supported by cluster mounts. The table below shows minimum ultimate strength ratings of several Hubbell cluster mounts, suggested maximum transformer weights, and resultant safety factors for four selected values of moment arm. Trained personnel with adequate technical skills may find this information helpful in selecting an appropriate cluster mount to support a specific transformer.

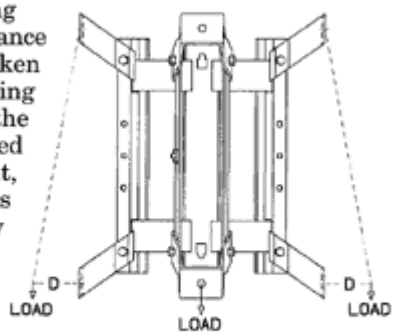

Catalog Number	Distance (D) from transformer mounting surface to load's line of action	Minimum Ultimate Strength (lbs.)	Maximum recommended Transformer load (lbs.) per position	Safety Factor
C5M1-9 C10M2-9 C15M3-9 C15M3-969	14"	6,000	2500	2.4
	18"	3,900	1950	2
	22"	3,200	1600	2
	26"	2,800	1350	2.1
C2M1-6 C4M2-6 C6M3-6	14"	3,400	1275	2.7
	18"	2,400	1000	2.4
	22"	2,100	820	2.6
	26"	1,650	690	2.4
C5M1-6 C10M2-6 C15M3-6	14'	6,400	3200	2
	18"	5,000	2500	2
	22"	4,000	2000	2
	26"	3,450	1725	2

Catalog Home