Products
› Index
› Featured Products
› Cross Reference
› UPC Search

Product Datasheet

Catalog Home Home Page Search

2894 -- EMT Compression Connector 3-1/2" Trade Size - Zinc

Product Specifications	
Family	EMT Fittings
Fittings Classification	Die Cast - Compression Connectors
Sub Class	Insulated
Trade Size	3-1/2"
Standard Packaging	Carton
Ship Carton Length	22.00
Ship Carton Width	9.00
Ship Carton Height	5.00
WT. PER HU.	176
Dimension A	2-13/16"
Dimension B	15/16"
Thread Spec. B	3-1/2-8 NPT
Dimension C	3-45/64"
Dimension D	5-1/16"
Dimension E	4-3/64"
Dimension F	1-23/32"
Unit Carton Quantity	10
Ship Carton Quantity	10
UPC Number	050169028940
Catalog PDF Page	PDF Catalog Page

Applications

- For use to economically bond EMT conduit to a box
- RACO® compression connectors are suitable for applications

above 600V
- RACO® 1/2" to 4" connectors provide concrete-tight connections

Product Features

- Rugged metallic construction provides mechanical protection for the raceway
- Oversized hex compression nuts assure easy wrench installation

Compliances

UL 514-B listed, File E195969 CSA

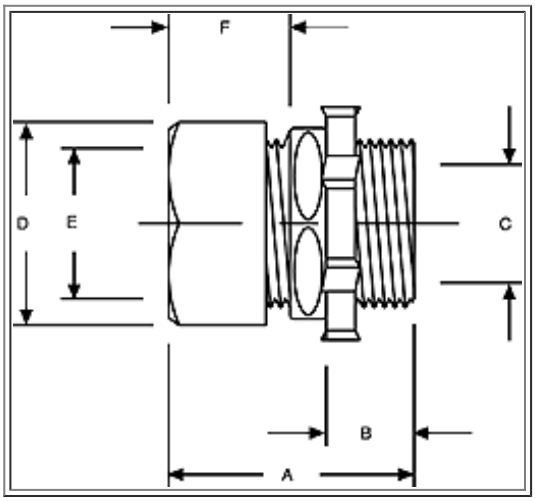

© 2003 RACO - a hubbell company. All right reserved.